RNJET H1/H2 Plus

Installation Manual

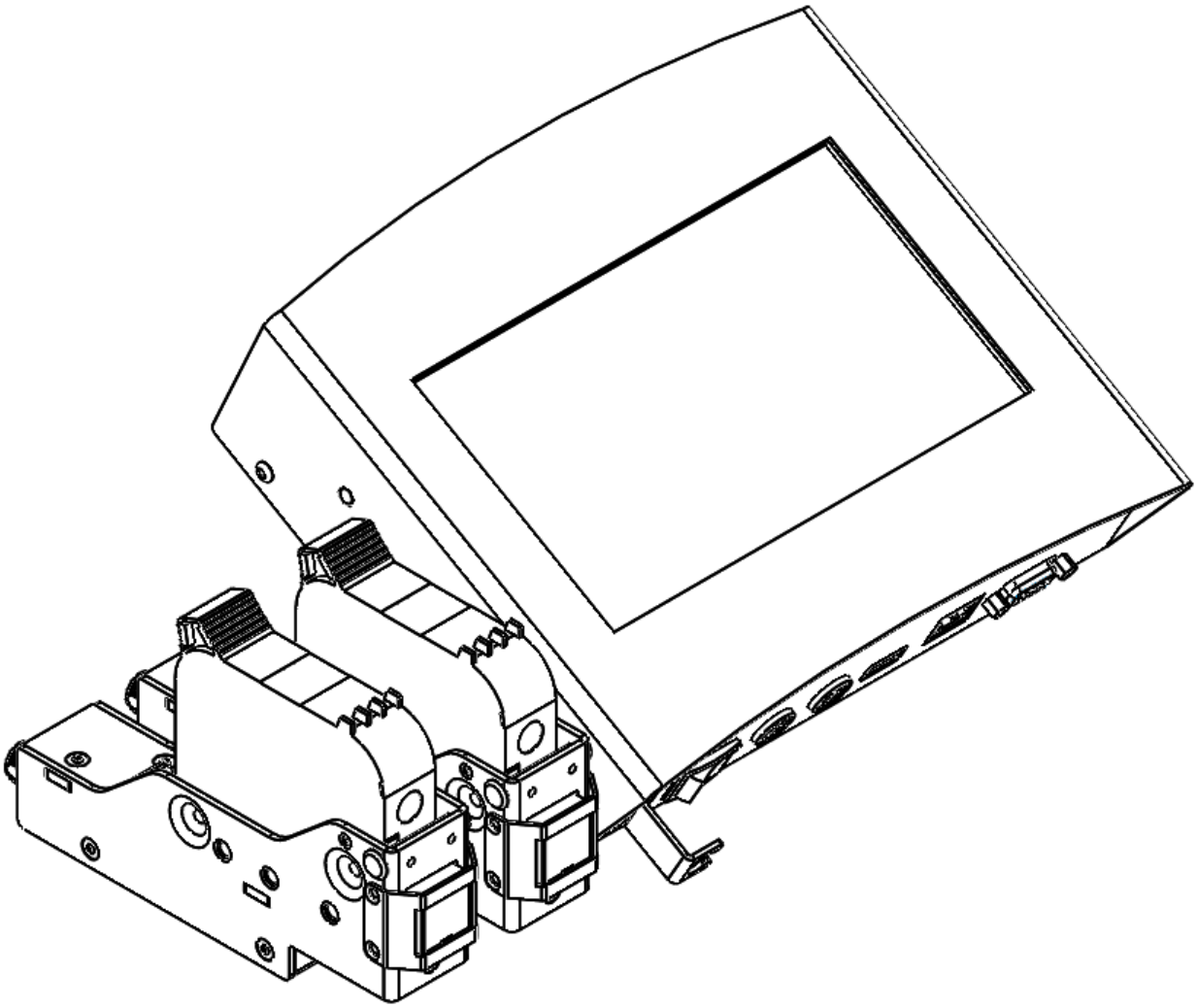

RNJET H1/H2 Plus

Industrial Hi-Resolution Inkjet Printing System

Installation Manual

Revised 07 2025-01-31

All rights reserved. All trademarks and
brand names are the property of their
respective owners.
RN MARK INC.
25-16 SIMS CRES. RICHMOND HILL, ON
L4B 2P1
TEL: +1(905) 597-4977; TF: +1(866) 551-9406; Whatsapp: +1(647) 242-8969
www.rnmark.com

Table of Contents

Notices & Cautions 1
Safety 1
Handling and care 1
Ink cartridges and cleaners 2
Introduction 3
What's in the box 3
System specifications 4
Operating Temperature: 4
Accessories and Consumables 6
Installation 7
Overview 7
Pipe Mounts 8
Controller 10
Print Head 12
Power Supply 13
Data Connections 14
Photocell Sensor 14
Shaft Encoder 16
USB 17
Ethernet 17
External Alarm Terminal 18
Serial Port (RS-232) 18
Print Head Ports 19
Start-up 22
Adjusting 22
Inserting (Remove) Cartridge 24
Priming / Purging 25
Maintenance and Services 26
Installation and Technical Support 26

Notices & Cautions

Safety

- Always follow safety regulations by wearing safety goggles, gloves and protective clothing during handling, installation, maintenance, and operating procedures for the printing system.
- Keep all print system components and operating liquids away from open flames and excessive heat.
- In case of fluid eye contact, flush immediately with water and receive appropriate medical attention.
- The power source used for print system should comply with all safety regulations and codes required for safe plugging.
- Power, data, and sensor input cables must be inserted appropriately in their respective locations. Where possible, route cables away from moving objects and secure via tie-wraps.

Handling and care

The printhead engine is encased and the print nozzles are exposed through the nozzle guard. Extra precaution should be taken when handling the cartridge during installation, operation, and maintenance. Never use abrasive materials on or near the exposed print nozzles.

Notice1: *Do not allow objects to be in direct contact with the print head's nozzles.*

Notice2: *Store device in temperature range of 0 - 45 °C*

Notice3: *Store ink in temperature range as described on Cartridge*

Notice4: *Do not forget to put the cartridge cap after removing the cartridge to prevent nozzle clogging*

Ink cartridges and cleaners

Inks come in different solutions, varieties, and codes (e.g. Water-based for porous substrates, Solvent- Based for non-porous substrates, Food Grade, etc.). Make sure to choose proper ink for each application.

Notice: *For best results, always use RN MARK premium inks.*

Please refer to list below for purchasing RN MARK premium ink cartridges:

Name	Description	Part Number
TIJ 2.5 BLK SG	Black Solvent-Based Fast Dry Ink Cartridge	100-1561-801
TIJ 2.5 BLK 9	Black Solvent-Based Adhesive Ink Cartridge	100-1569-801
TIJ 2.5 BLK W	Black Water-Based Ink for Porous Material	100-1566-801
TIJ 2.5 White	White Solvent-Based Ink Cartridge	100-1569-804
TIJ 2.5 Yellow g	Yellow Solvent-Based Ink Cartridge	100-1569-805
TIJ 2.5 FG Pink	Pink Food Grade Ink Cartridge	100-1567-811
TIJ 2.5 FG Blue	Blue Food Grade Ink Cartridge	100-1568-802
TIJ CS 60	TIJ Spray Cleaner	100-1563-708

For more information, please go to www.rnmark.com

Notice: make sure to use identical ink bases for each printer system and avoid exchange of ink with other varieties. (ex. if you are using solvent-base ink never change to oil-based ink and vice versa)

Introduction

What's in the box

Following are all the components that are included inside the device package.

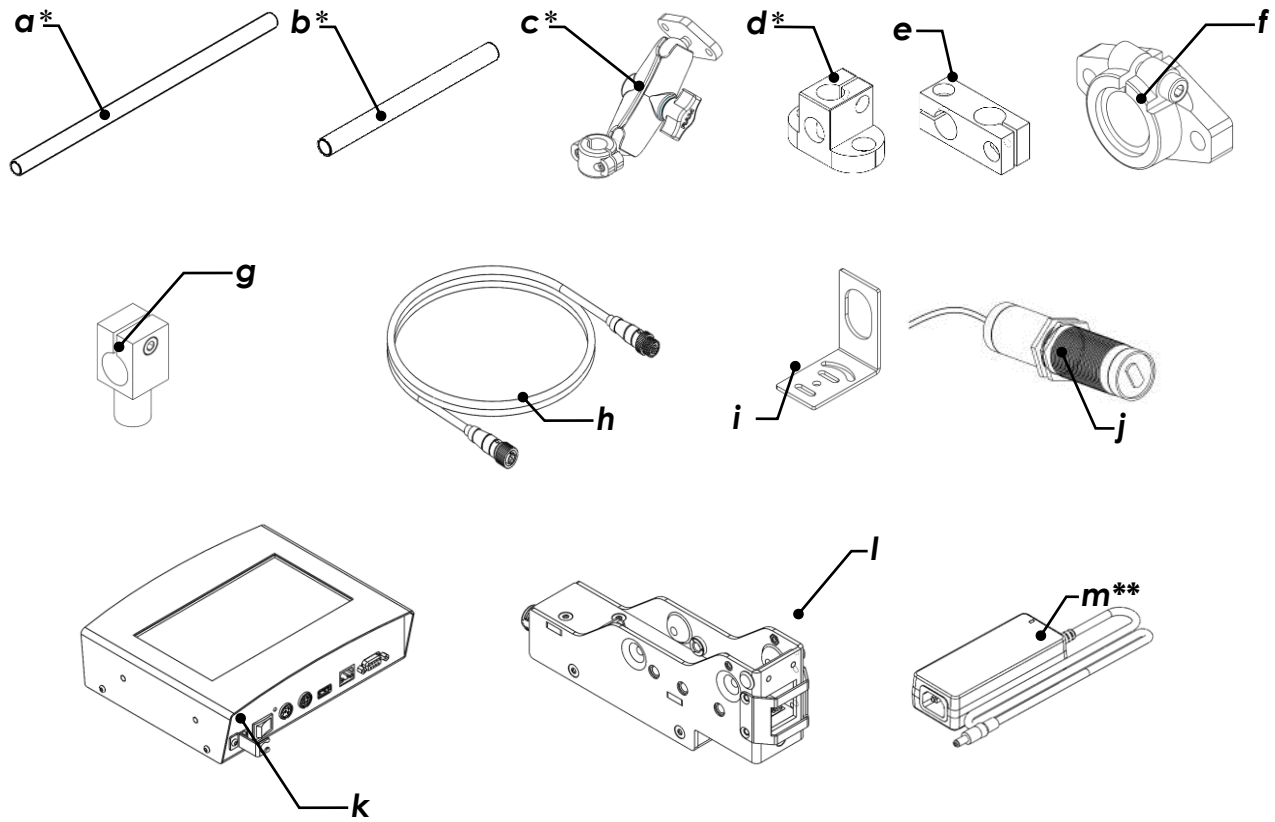

a: *Ø16 x 380mm x 2pcs [4pcs]**

b: *Ø16 x 200mm x 1pc [2pcs]**

c: *Controller Pivot Mount x 1pc**

d: *Pipe Cross Base Mount x 1pc [2pcs]**#*

e: *Pipe Cross Mount x 2pcs [4pcs]**

f: *SHF16 Strut Clamp x 1pc [2pcs]**

g: *KLKA16-20 Strut Arm x 1pc [2pcs]**

h: *Data Cable(2m) x 1pc [2pcs]*

i: *Photocell Mount x 1pc*

j: *Photocell Sensor x 1pc*

k: *Controller x 1pc*

l: *Print Head x 1pc [2pcs]*

m: *Power Adaptor x 1pc***

** These parts are optional in NO-Attachment version of RNJet H1/H2 Plus and must be ordered separately.*
*** Due to different power plug standards worldwide, we do not supply the power cord.*

 # Screws are not provided since the thickness, depth, material, tapped or not for customers differ

Figure 1

System specifications

General

Operating Temperature: 0-45 °C
***Max Speed:** up to 90 m/min (300 ft/min)
***Resolution:** 300 DPI
Print Height: 12.7 mm (0.5") [up to 25.4 mm (1"), conditions apply]
I/O power: (100-240 V 50/60 Hz 5.0A) / (12 V 60W)
I/O data: NPN Sensor input (e.g. photocell) , integrated 7" Touch LCD input, Speed encoder input (shaft encoder), USB input, RS-232 connection.
Cartridge: 45ml Sealed ink cartridge
20 million characters per cartridge (based on 50 dots/character)
Ink-Type Compatibility:

Fast dry solvent-based for porous and non-porous materials, Fast dry water-based for porous material, Food Grade.

Software:

Advanced layout design in RN Soft Windows-based OS (PC)
User-friendly layout design in RN Soft Linux-based OS (Touch LCD)
Dynamic Data Generation
Supports all general graphic input file types & True Type Fonts

Supported Barcode Types:

1-D: All major 1-D barcode formats such as: Codabar, Code, EAN, MSI, RSS, UPC, TF, GS1databar, etc.

2-D: QR-Code, ECC200 (Datamatrix), PDF417/macro, Aztec, etc.

Standards & Certificates:

CE, FCC, CSA, ICES, Lead-free & RoHS compliant

* These are the default values, refer to user manual for more information if higher speed is required.

Dimensions:

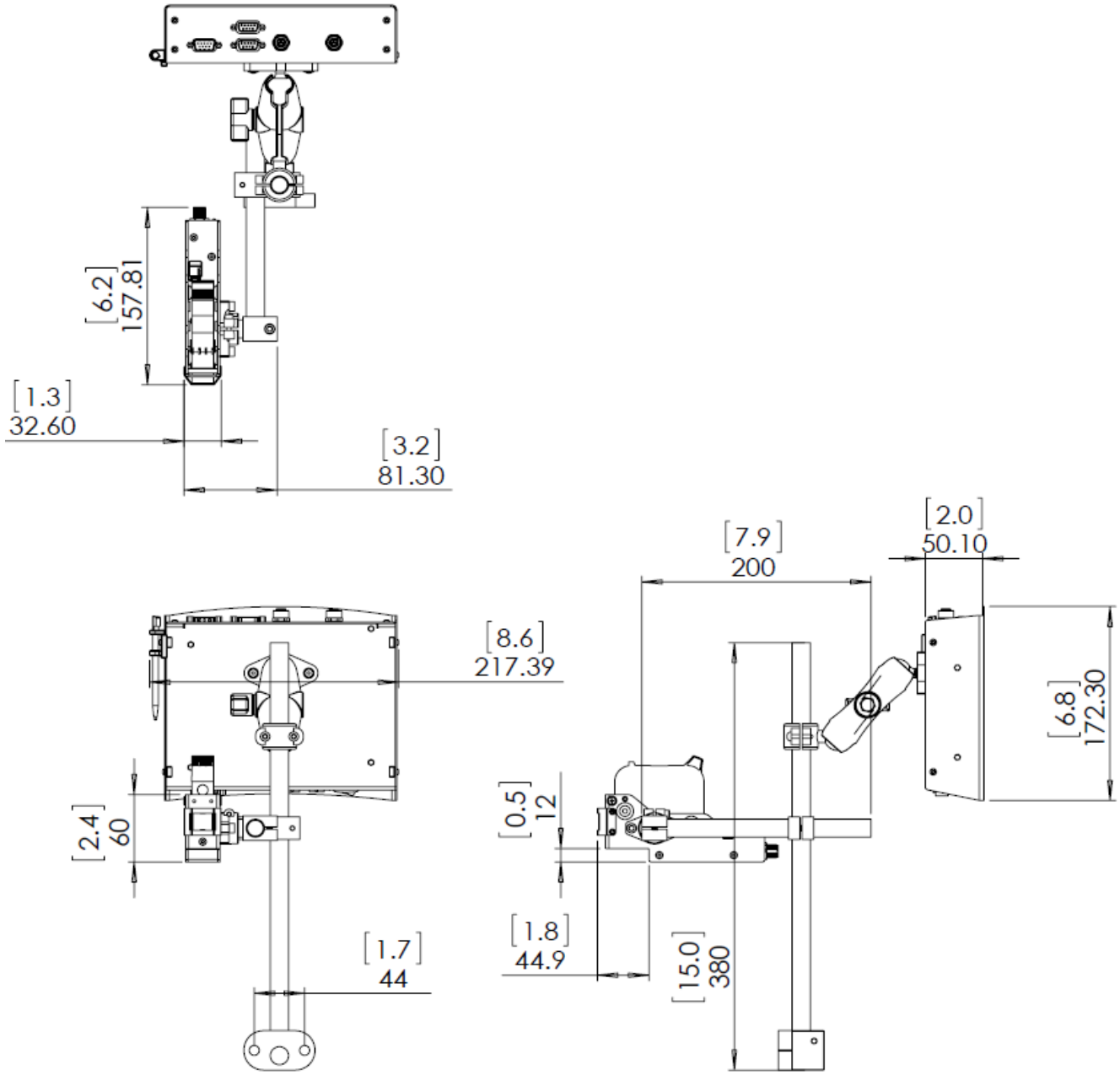

RNJet H1/H2 Plus Dimensions are in mm [inch]*

Figure 2

Accessories and Consumables

Below are optional and essential items your device should have in order to function or keep up with the maintenance schedule. (See Figure 3)

You could find more information on accessories and consumables on our website at www.rnmark.com .

Notice: *Items below are not included in this package and should be ordered separately.*

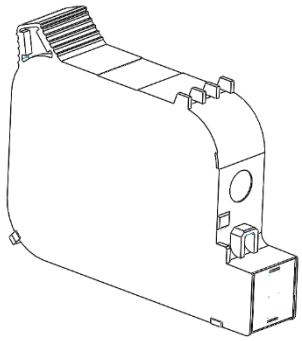

Ink cartridge

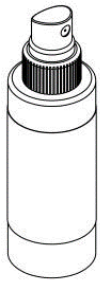

Cleaner Spray

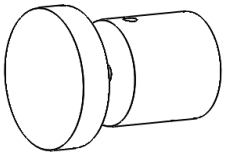

Shaft Encoder

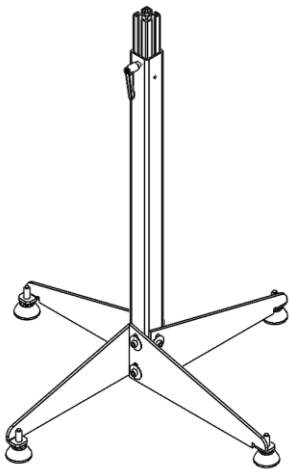

Portable stands

Figure 3

Installation

Overview

- Here is the preview of the installation method with the pipe mounts provided

a: *Pipe Cross Base Mount*
b: *Ø16 x 380mm Pipe*
c: *Ø16 x 200mm Pipe*
d: *Pipe Cross Mount*
e: *Controller Pivot Mount*
f: *Controller*
g: *SHF16 Strut Clamp*
h: *KLKA16-20 Strut Arm*
i: *H1 Print Head*

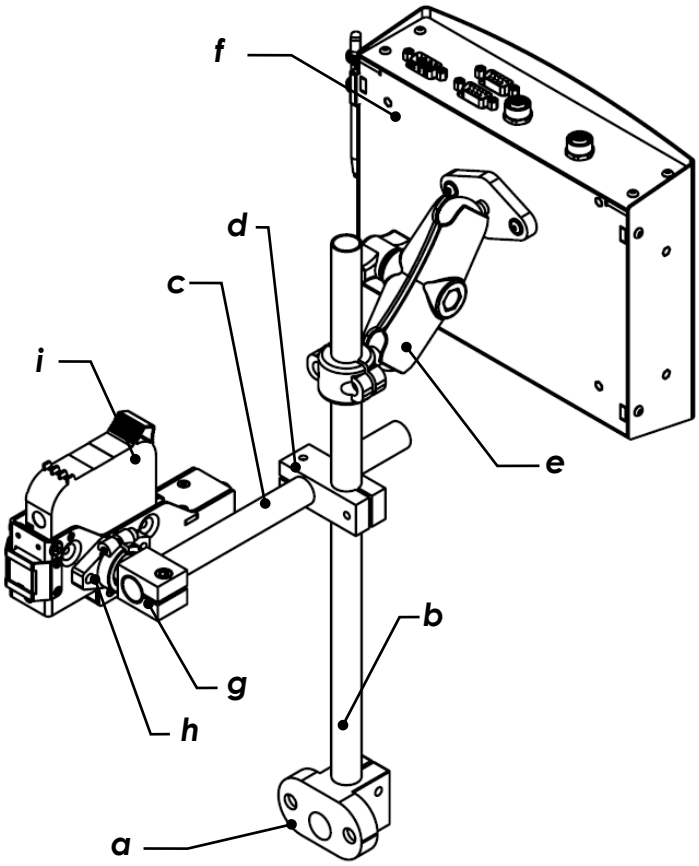

Figure 4

Pipe Mounts

- Find the desired place for installation, i.e. side of conveyor. Drill 2X M6/ M8 holes with 44mm horizontal gap.

a: *Pipe Cross Base Mount*

b: *M6/ M8 Screws* ***

*** Not provided since the thickness, depth, material, tapped or not for customers differ ***

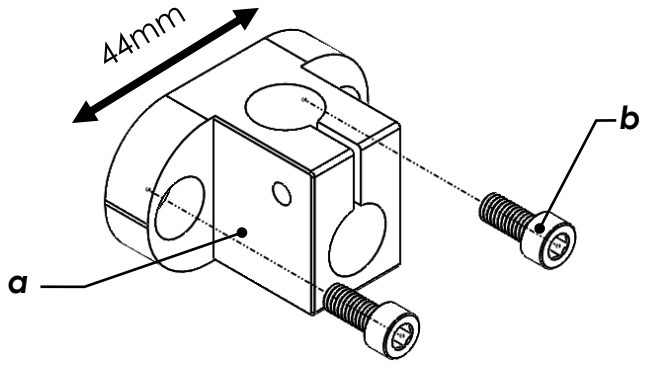

Figure 5

- Insert Ø16 x 380mm Pipe into the Pipe Cross Base Mount

a: *Ø16 x 380mm Pipe*

b: *Pipe Cross Base Mount*

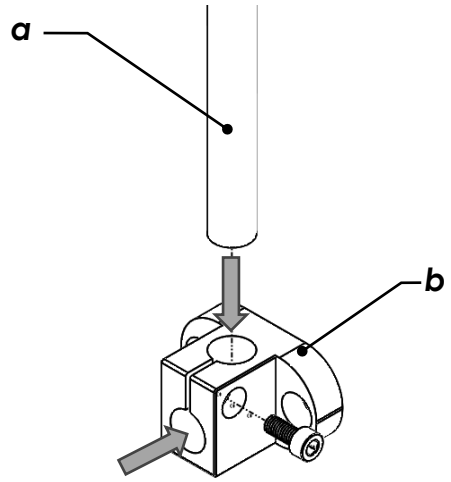

Figure 6

- Fix another Ø16 pipe with the Pipe Cross Mount

a: *Ø16 x 380mm Pipe*
b: *Ø16 x 200/380mm Pipe*
c: *Pipe Cross Mount*

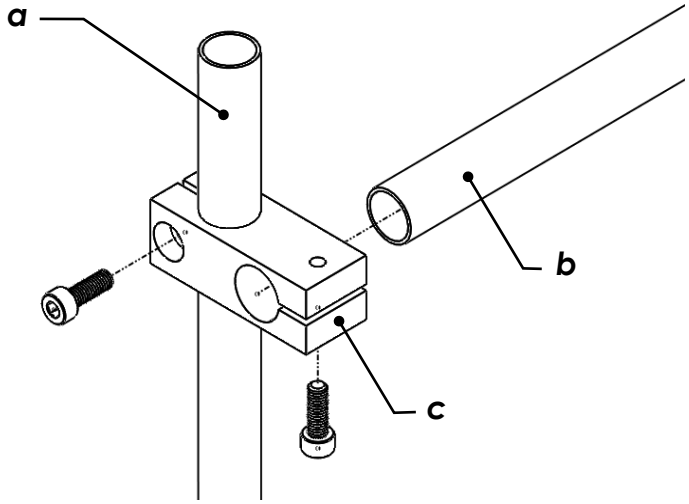

Figure 7

- Fix SHF16 Strut Clamp to the pipe

a: *SHF16 Strut Clamp*
b: *Ø16 x 200/380mm Pipe*

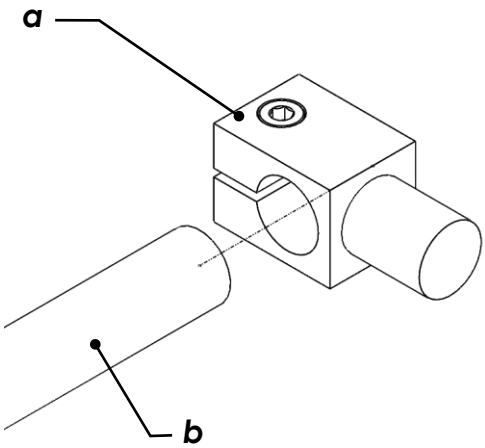

Figure 8

Controller

- Use 2X M4 Flange Head screws to fix the Pivot Mount to the controller

a: *Controller*
b: *Pivot Mount*
c: *2X M4 Flange Head Screws*

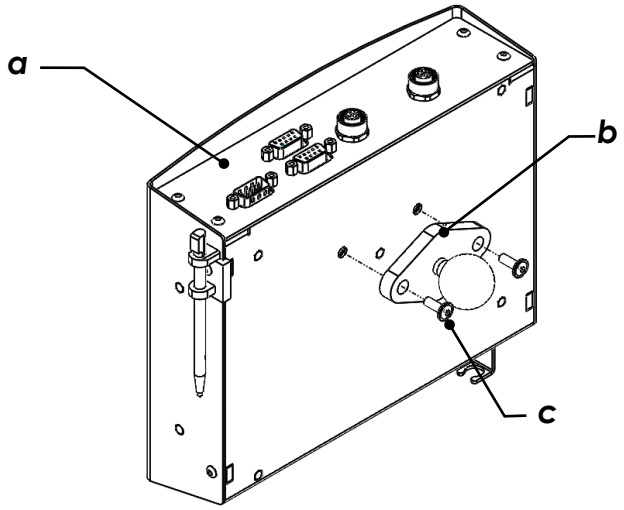

Figure 9

- Use 2X M4 Socket Head screws to fix the Pipe Mount

a: *Pipe Mount Top*
b: *Pipe Mount Base*
c: *2X M4 Socket Head Screws*

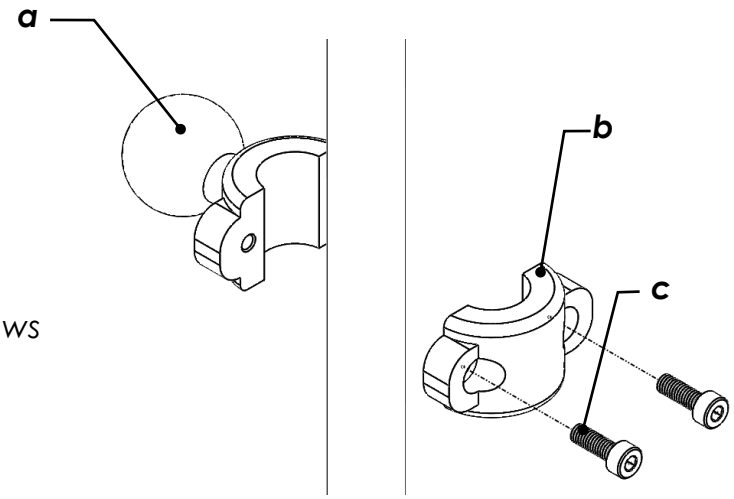

Figure 10

- Assemble the controller to the Pipe Mount

a: *Controller*
b: *RAM Mount*
c: *Pipe Mount*

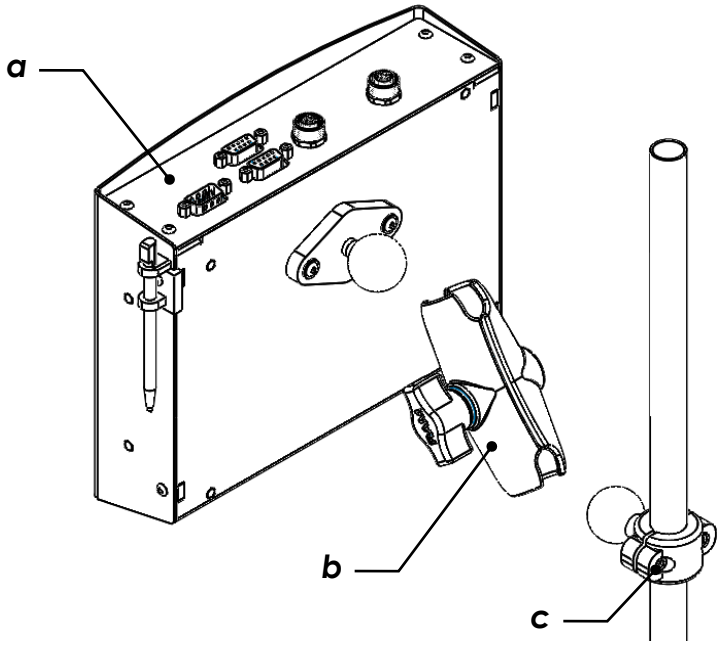

Figure 11

- Adjust the angle/ height as desired

a: *Adjustment Knob*

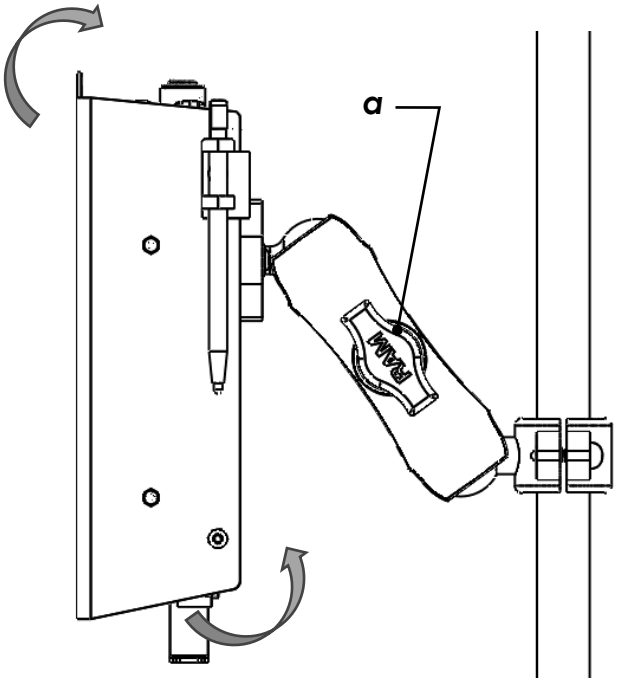

Figure 12

Print Head

- Use 2X M5 Screws to fix the H1 Print Head to SHF16 Strut Clamp and then mount to KLKA16-20 Strut Arm.

a: *H1 Print Head*
b: *SHF16 Strut Clamp*
c: *KLKA16-20 Strut Arm*
d: *2X M5 Screws*

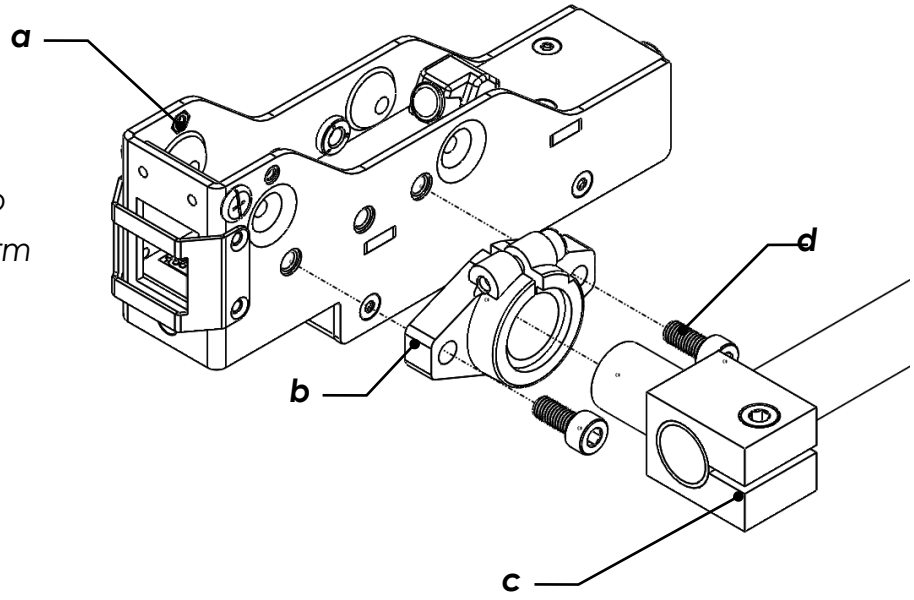

Figure 13

Power Supply

- Insert the male end of the power adapter cable supplied at the back of printer (refer to Figure 14).
- Connect an applicable length power cord (**NOT PROVIDED FOR INTERNATIONAL CUSTOMERS**) to the power adapter and plug into power source supply (single phase/120/240V AC 15 amp circuit). Avoid where possible the use of extension cords.

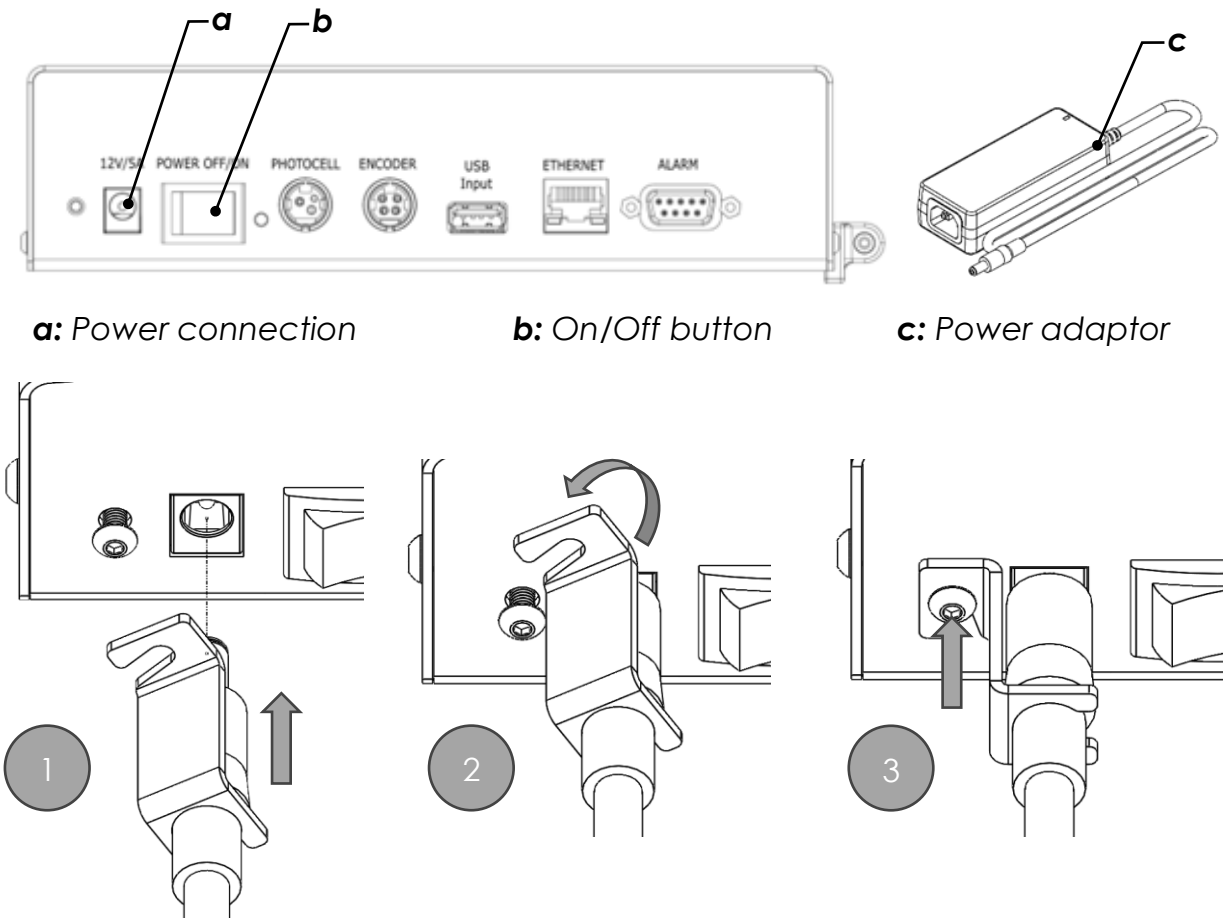

a: *Power connection* ***b:*** *On/Off button* ***c:*** *Power adaptor*

Figure 14

Data Connections

Notice: *DO NOT Connect/Disconnect the connectors when the power button is ON.*

Notice: *Power, data and sensor input cables must be inserted appropriately in their respective locations. Where possible, route cables away from moving objects and secure via tie-wraps.*

Photocell Sensor

For print trigger, a photocell sensor is included. Photocell sensor works as Light ON trigger (see Figure 15).

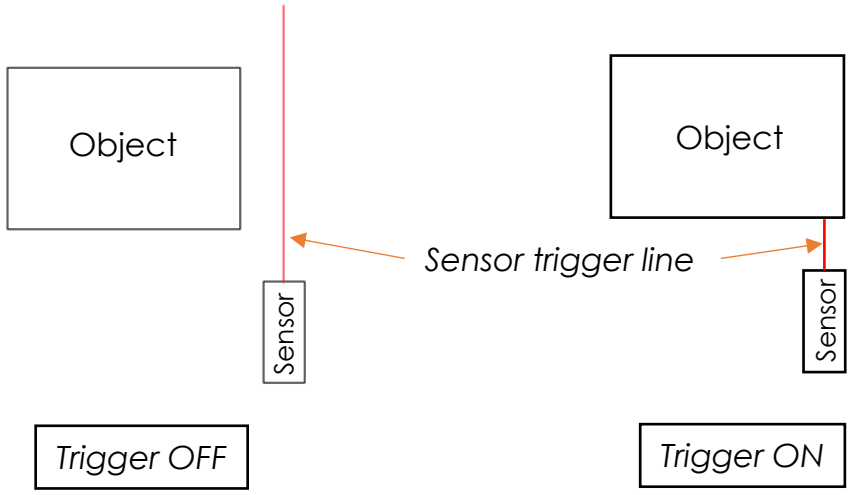

Figure 15

As shown in Figure 16, the printer system provides an NPN sensor signal input which triggers print command. It could be used with any 12 VDC NPN sensor.

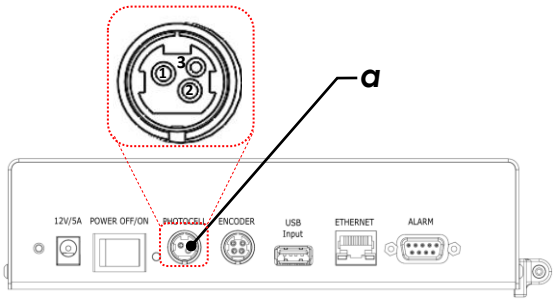

a: *Photocell Female connector (board side)*

1: *12 VDC*
2: *Ground*
3: *NPN Signal*

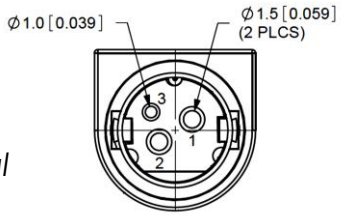

b: *Photocell Male connector (cable side)*

Figure 16

A Photocell sensor with proper 3-Pin connector as well as a photocell mount bracket is included for versatile mounting on conveyor system. Photocell bracket can be mounted on either side of the head if possible (See Figure 17).

a: *Photocell Mounting hole*

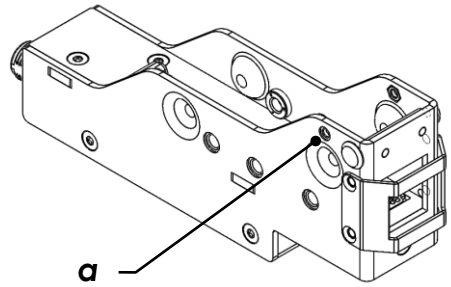

Figure 17

Start with assembling the photocell sensor to the photocell mount. Then, fix them to the printhead with the M3 screw provided.

a: *Photocell*
b: *Photocell mount*
c: *Photocell nut*

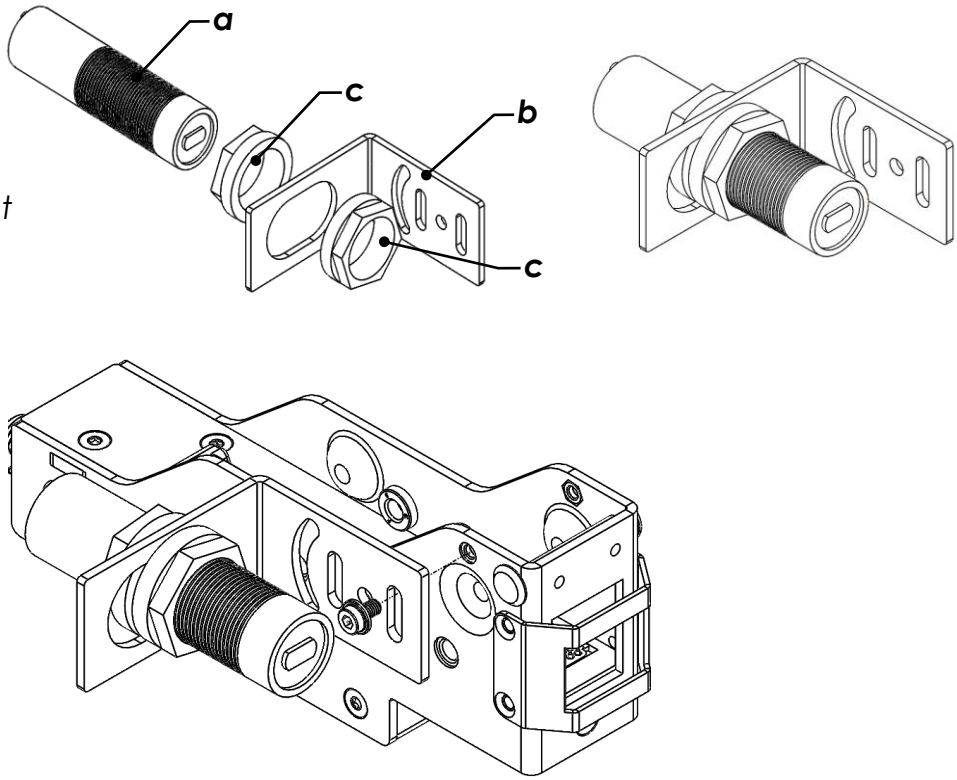

Figure 18

As shown in Figure 19, There are two settings on the photocell sensor body for adjusting sensing range (270° Potentiometer) and operating mode (2 positions).

Sensor is more sensitive to lighter colors (Highest: White) and less sensitive to darker colors (Lowest: Black). It also must be in Normally Open mode to trigger the print every time the printing substrate passes by.

a: *Minimum Sensitivity (distance)*
b: *Maximum Sensitivity (distance)*
c: *Normally Closed Mode*
d: *Normally Open Mode*

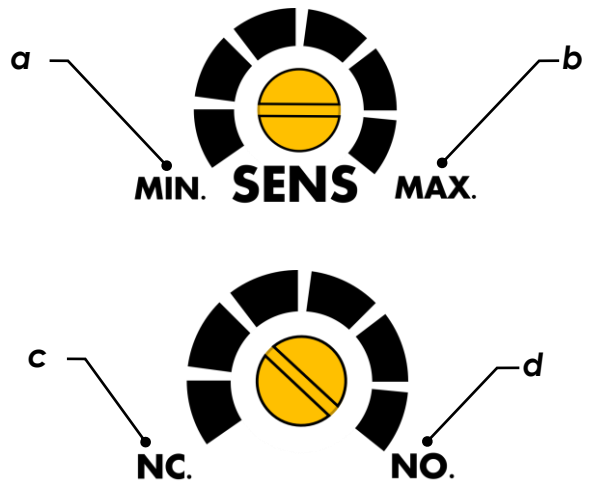

Figure 19

Notice: *Sensor is preadjusted to Max sensitivity and Normally Open mode. Please do not touch the settings unless required otherwise.*

Shaft Encoder

Printer system is shaft encoder ready and provides a 12 VDC signal input (NPN configuration) on board which triggers print command (Figure 20). This function is available on demand. Consult your distributor for more details.

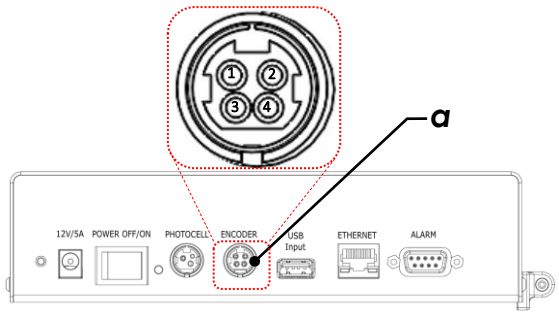

a: Encoder Female connector (board side)

1: 12 VDC
2: Ground
3: Signal 1
4: Signal 2

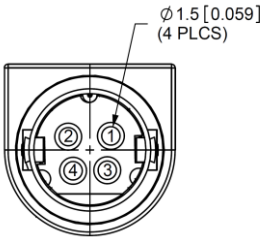

b: Encoder Male connector (cable side)

Figure 20

The print head resolution is **R=300 DPI**. For an encoder with **N** number of pulses per revolution, Wheel Diameter **D**, is calculated by equation below:

$$\boldsymbol{D} = \frac{\boldsymbol{N}}{\pi \boldsymbol{R}}\ [in] \quad or \quad \boldsymbol{D} = \frac{25.4\boldsymbol{N}}{\pi \boldsymbol{R}}\ [mm]$$

The units used in the shaft diameter calculation formula for **n=1** revolution is as shown below:

$$\boldsymbol{D}[in] = \frac{\boldsymbol{N}\ [pulse/rev] \times n[rev]}{\pi \boldsymbol{R}[pulse/in]} \quad or \quad D[mm] = \frac{\boldsymbol{N}\ [pulse/rev] \times 1[rev]}{\pi \boldsymbol{R}[pulse/in]} \times \frac{25.4\ [mm]}{1\ [in]}$$

For example, the wheel diameter for a Shaft Encoder with **N=2500 pules per revolution** is: $D = \frac{2500 \times 1 \times 25.4}{300\pi} = 67.4mm\ (2.65")$

USB

USB port is used for data uploading on typical flash drives compatible with USB2.0 connections and should not be used for any other purposes.

Notice: *Insert the USB before turning the machine ON*

a: USB Port

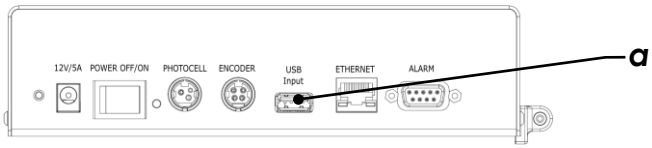

Figure 21

Ethernet

Ethernet connection can connect print system to external controllers using IP based communication with PCs, PLCs, etc. Print system programming and message layout uploading/downloading is managed through this port.

Notice: *For more information on print system configurations and Ethernet connection capabilities, please refer to "USER's MANUAL" accompanied with the device.*

a: Ethernet Port

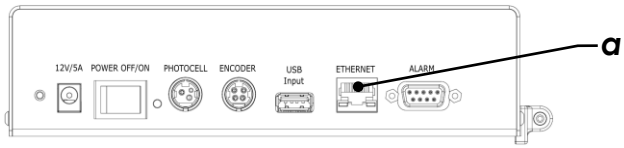

Figure 22

External Alarm Terminal

An external beacon alarm can be connected to the alarm terminal if necessary. The pinout is indicated below.

a: Alarm Terminal

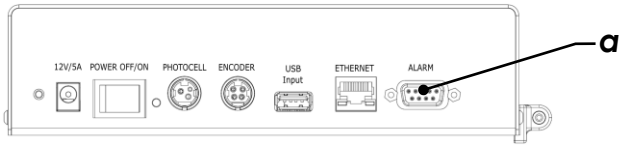

FEMALE

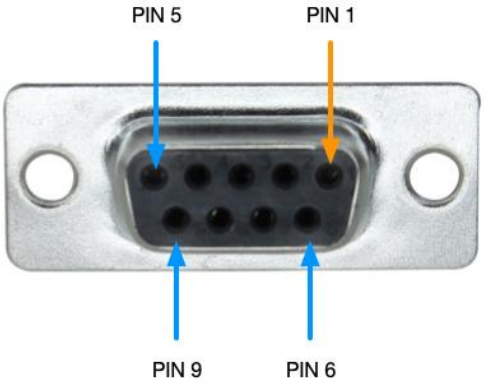

Pin#	Color	Function
1	Reserved	-
2	Red	No Ink/Tag Lost
3	Grey (GND)	-
4	Yellow	Ink Low
5	Green	Print ON
6-9	Grey (GND)	-

Table 1.

Serial Port (RS-232)

RS-232 port, shown in Figure 23, is used for data communication through PLC/PC for external command/TEXT through compatible RS-232 cables and should not be used for any other purposes (for more information please refer to "USER's MANUAL" accompanied with the device).

Notice: *Before turning ON the machine, insert the RS-232 connector which is located on the side of the printer.*

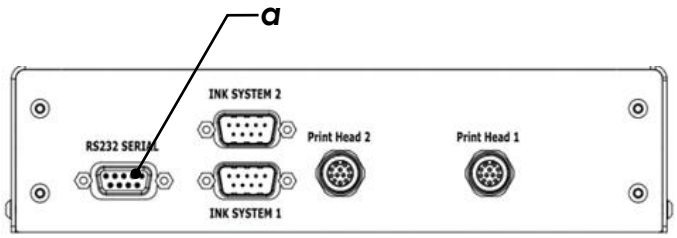

a: *Serial Port (RS-232)*

Figure 23

Print Head Ports

Print head drivers need to be connected to the ports on the Controller (shown in Figure 24) via provided cables.

Notice: *Connect the cables provided accordingly before turning on the Printer.*

a: *Head1 (12 PIN Female Port)*
b: *Head2 (12 PIN Female Port)*
c: *Groove*

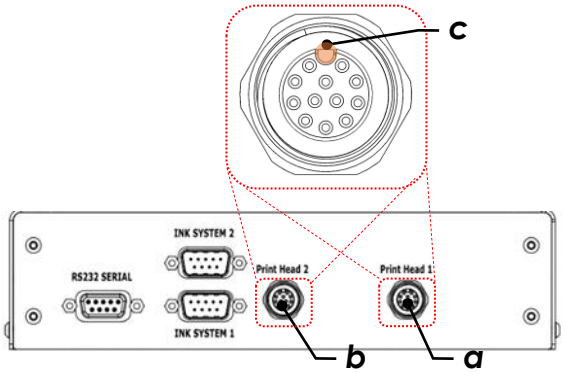

Figure 24

The ports on the controller are Female type and therefore must be connected to the Male Pin side of the cable. The plastic tongue on the cable connector must be aligned with the groove on the female connector and gently finger tighten the threaded part into the port. The arrow indicator on the connector shows the location of plastic tongue and must always be faced up.

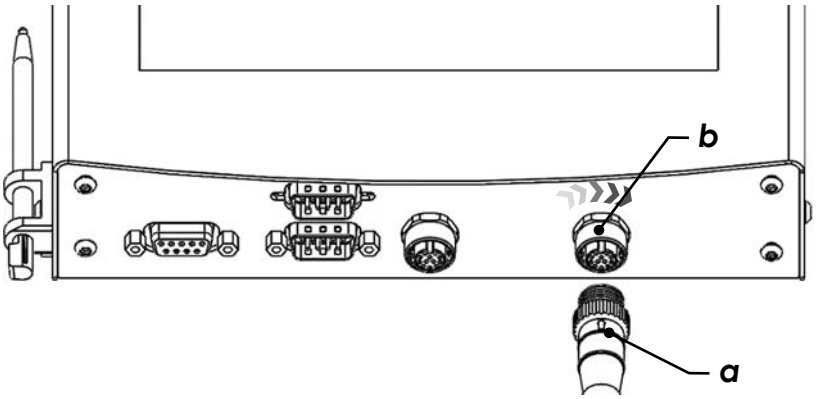

a: *Arrow indicator*

b: *Groove*

Figure 25

The other end of the cable is Round 12 Pin Female connector which also has an arrow indicator for the groove, ***MUST BE ALIGNED WITH THE PLASTIC TONGUE*** *on the Print head driver port as shown in* Figure 26. *Forcing with wrong orientation could lead to bending pins which leads to failure or damage.*

a: *Printhead Connector*
b: *Cable*
c: *Plastic Tongue*
d: *Tongue Groove*

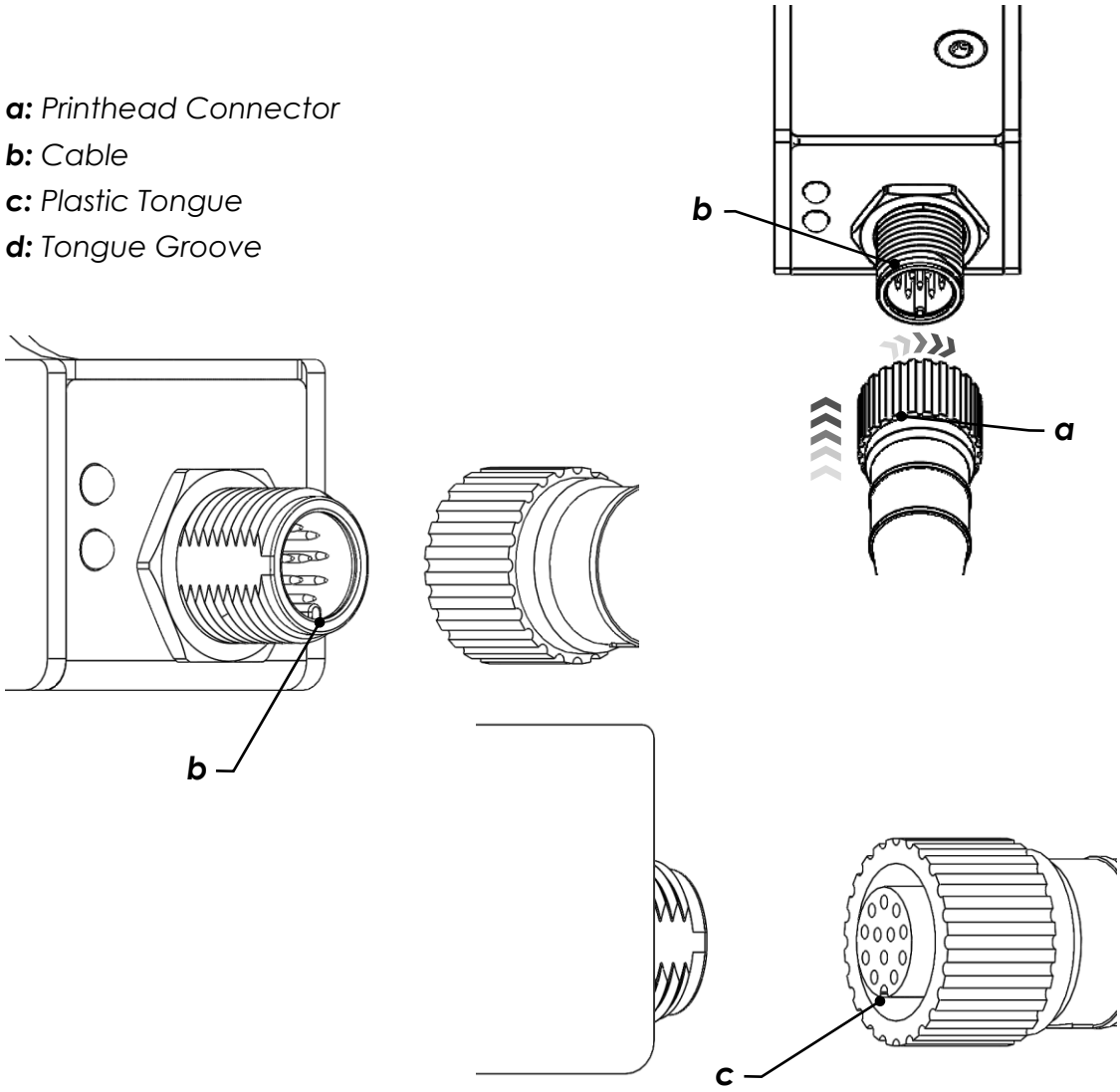

Figure 26

Notice: *The threads on the connectors are meant to be finger-tightened and must never be over forced by wrench or mechanical tools.*

Start-up

Adjusting

- With the pipe mounting system, the H1 Print Head can be mounted at all different angles.

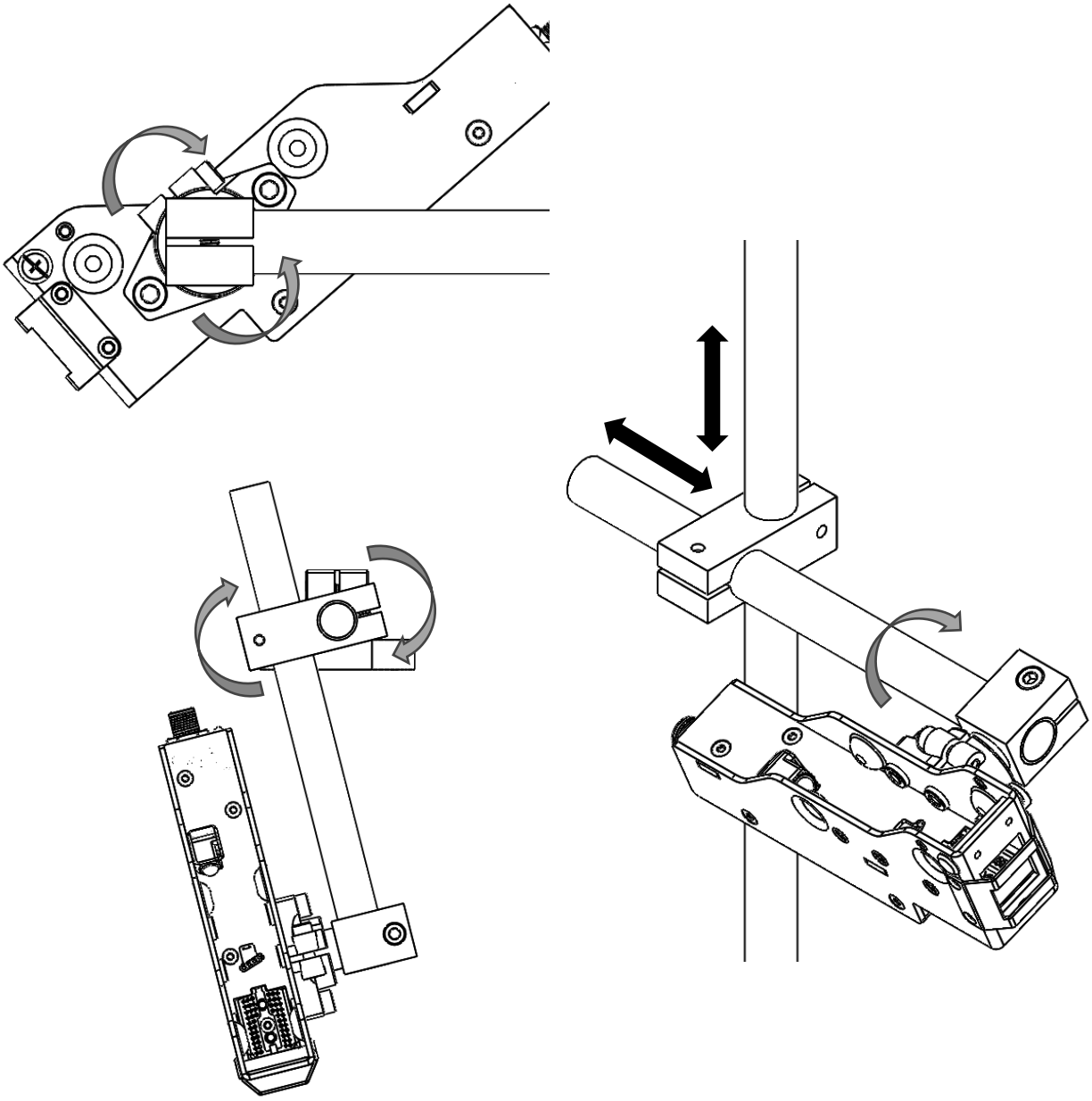

Figure 27

The **operating distance** between the exposed print nozzles on the cartridge and the desired printable surface **is 1-10mm** (see Figure 28). This may vary depending on the printing speed and operating environment conditions.

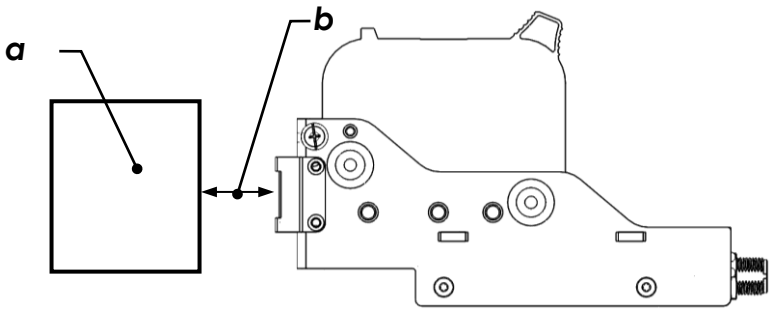

a: *Substrate*

b: *distance between Printhead and substrate [1-10 mm]*

Figure 28

Notice: *Care must be taken to ensure that no part of the moving object comes in direct contact with the printer head assembly, mounting parts or any cables or cords.*

Inserting (Remove) Cartridge

- Carefully feed the cartridge into the printhead with a **FLAT ANGLE**
- Push the cartridge forward and downward until a clear "CLICK" sound
- Vice versa for removing, lift the cartridge and then pull the cartridge out with a **FLAT ANGLE**

a: *Cartridge*

b: *Print Head*

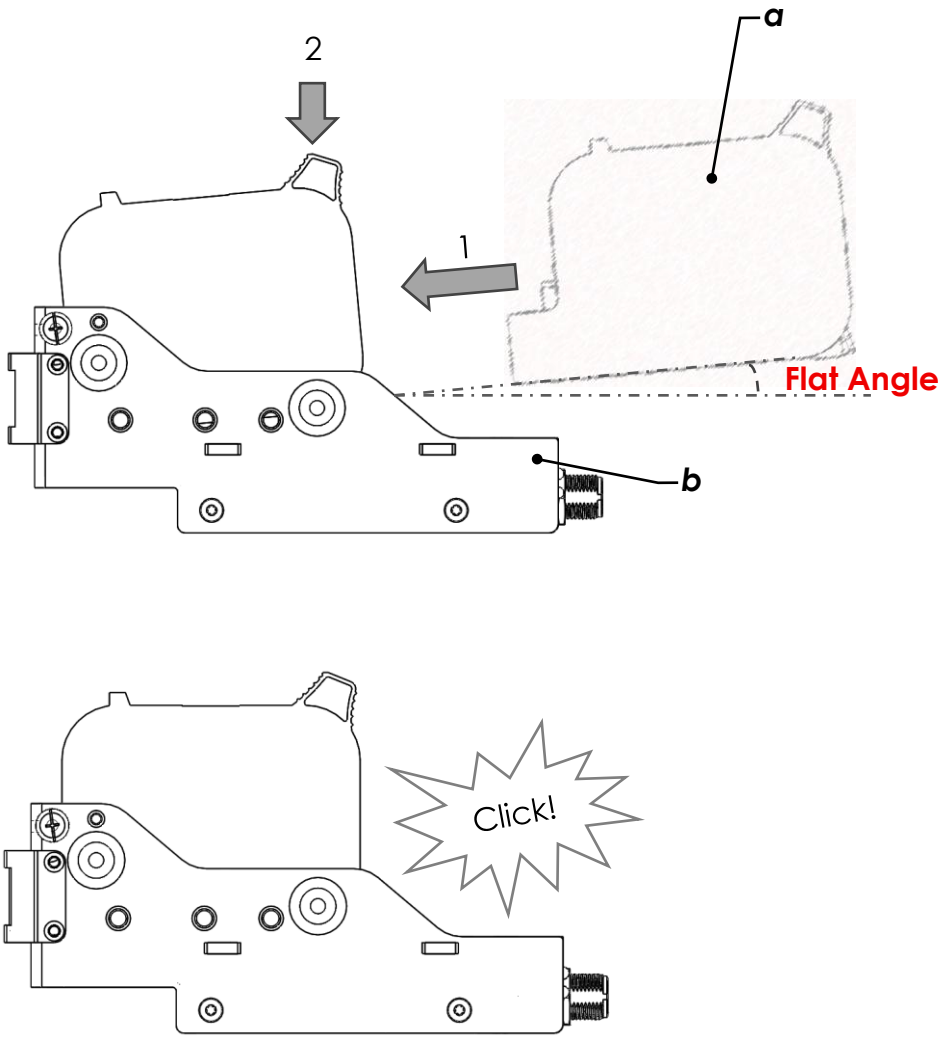

Figure 29

ATTENTION: *Never remove the cartridge when the print is ON!*

Notice: *Take out the cartridge at the end of the day and put the cover back to prevent nozzle clogging. The nozzles must not be left exposed in air for more than 10 hours.*

Priming / Purging

The ink system must be primed and purged before the first print. It is recommended that an absorbent material (preferably lint free) be held under nozzle plate.

- Hold the cartridge with nozzle plate facing down and press it toward the absorbent material over a flat surface. Let the gravity drain the ink out of nozzles.
- You will see two lines of ink trace, one for each nozzle column, if not gently apply pressure from sides until ink flows out.
- Gently dab the print nozzle guard with an absorbent material (preferably lint free) to remove any expelled ink.

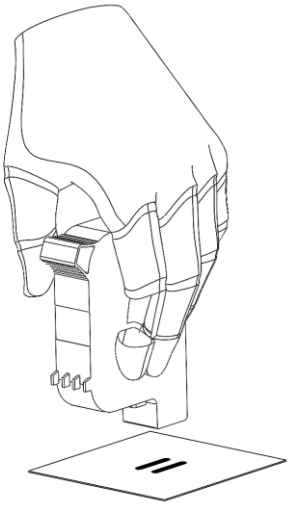

Figure 30

Maintenance and Services

The printer head may require cleaning and maintenance due to environmental or product debris such as dust, hair, fibers etc. Care must be taken during cleaning to ensure the exposed print nozzles are not damaged.

> ***Notice:*** *Always store the cartridges with nozzle plate facing down to prevent nozzle clogging.*

> ***Notice:*** *Use only RN MARK Spray cleaner for printhead maintenance.*

Installation and Technical Support

Telephone and Whatsapp technical support are available in Canada and the U.S. Monday through Friday 9:00am to 5:00pm EST.

Toll-Free: 1 866 551 9406

Sales: 1 905 597 4977

Sales: 1 905 597 4978

Tech Sup: 1 905 597 9406

Tech Sup: 1 905 597 9406 (Whatsapp Available)

Questions and comments can also be sent to: ts@rnmark.com

WWW.RNMARK.COM