RNJET EP 6H+

Egg Printer

Installation manual

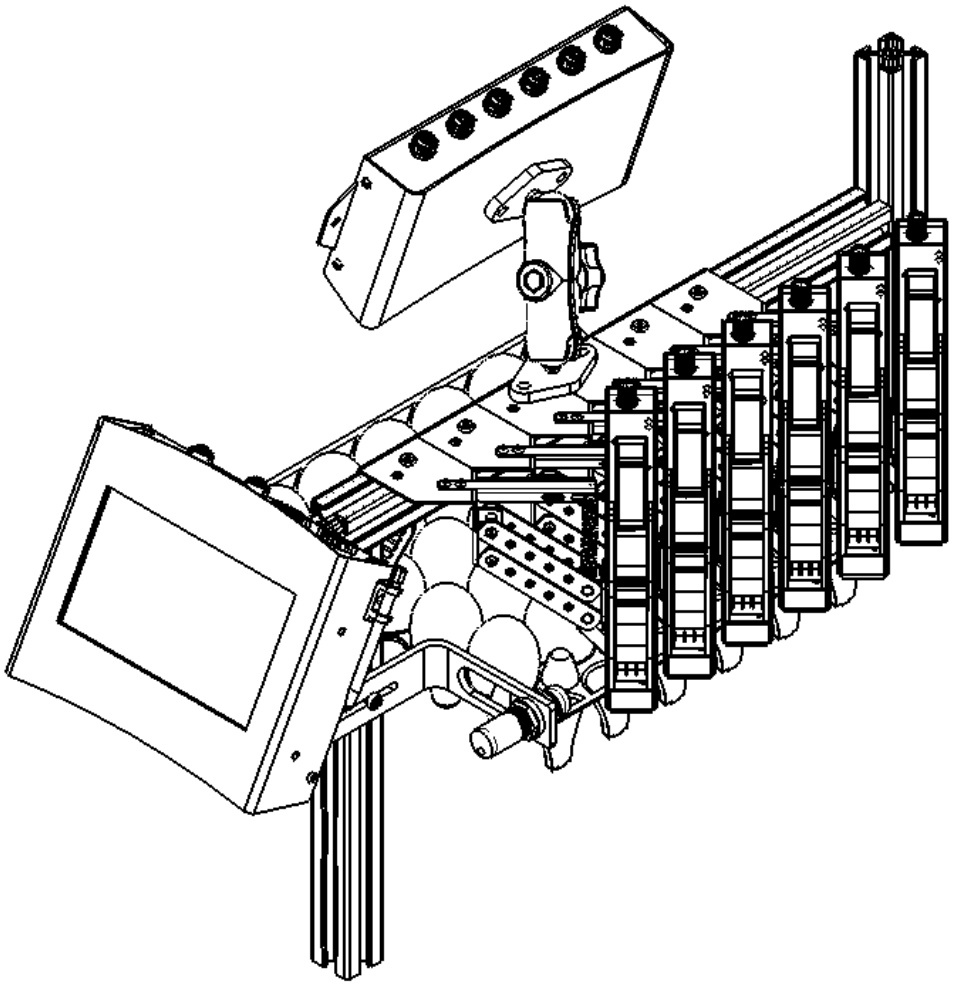

MARK

RNJET EP 6H+

Industrial Hi-Resolution Inkjet Printing System

Installation Manual

Revised 04 2/18/2025

All rights reserved. All trademarks and brand names are the property of their respective owners.
RN MARK INC.
25-16 SIMS CRES. RICHMOND HILL, ON
L4B 2P1
TEL: +1(905) 597-4977; TF: +1(866) 551-9406; Whatsapp: +1(647) 242-8969
www.rnmark.com

Table of Contents

Notices & Cautions 1
- Safety 1
- Handling and care 1
- Ink 2

Installation 3
- Set-up 3
  - Print head 3
  - Mounting Bar 3
  - Mounting Print Heads and Hub 4
  - Mounting the Controller 7
  - Power Supply 8

Data and input Connections 10
- Controller to Hub 10
- Hub to Print Heads 11
- Photocell 11
- Shaft Encoder 14
- USB 16
- Ethernet 16

Start-up 17
- Inserting cartridge 17
- Priming / Purging 19

Maintenance and Services 20
- Installation and Technical Support 20

Notices & Cautions

Safety

- During handling, installation, maintenance and operating procedures for the printing system, always follow safety regulations by wearing safety glasses, gloves and protective clothing.
- Keep all print system components and fluids away from open flames and excessive heat.
- In case of fluid eye contact, flush immediately with water and receive appropriate medical attention.
- The power source used for print system should comply with all safety regulations and codes required for safe plugging.
- Power, data and sensor input cables must be inserted appropriately in their respective locations. Where possible, route cables away from moving objects and secure via tie-wraps.

Handling and care

The printhead engine is encased and the print nozzles are exposed through the nozzle guard. Extra precaution should be taken when handling the printer head during installation, operation and maintenance. Never use abrasive materials on or near the exposed print nozzles.

Notice: *Do not allow objects to be in direct contact with the print head's nozzles.*

Notice: *Store device in temperature range of 0 -45° C*

Notice: *Store ink in temperature range as described on Cartridge*

Ink

Inks come in different solutions, varieties, and codes (e.g. Oil-based, Solvent Based, UV, etc.), make sure to use identical ink for each printer system and avoid exchange of ink with other varieties.

Notice: *For best results, always use RN MARK premium inks.*

Installation

Set-up

Print head

The compensator Mechanism is demounted from print head when the printer is packed. To prepare for assembly it must be mounted as shown in Figure 1.

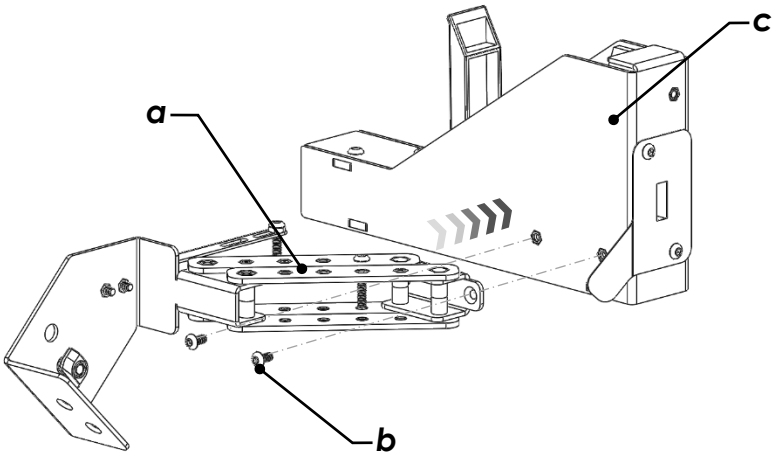

a: *Compensator Mechanism* ***b:*** *M3 Screw* ***c:*** *Print Head*

Figure 1

Mounting Bar

Notice: *Installation and positioning the print system is typically unique to each customer. Therefore, only standard parts are supplied for convenience and customized brackets are needed to be made if necessary.*

- Align the conveyor clamp with the two threaded holes on the bottom of the printer.
- While holding the printer, tightly fasten the M5 Nuts as shown in Figure 2.

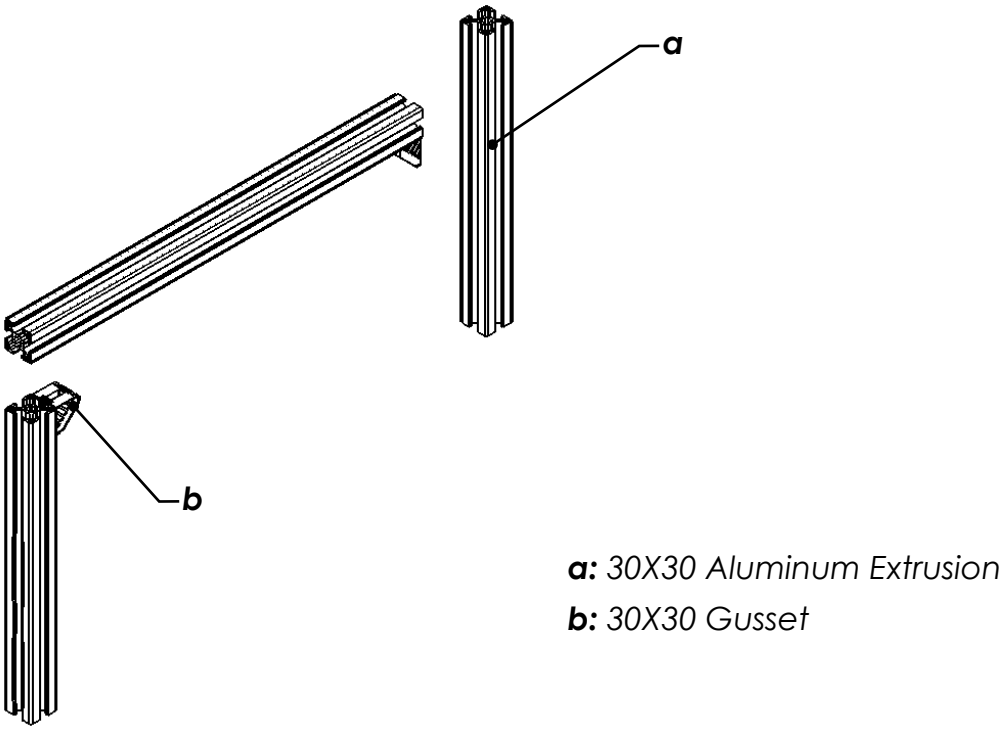

Figure 2

Mounting Print Heads and Hub

The hub is designed to be mounted anywhere close to print heads. This is just an example of how the hub can be mounted by Pivot mount. Pivot mount is consisted of three parts: 1x arm and 2X ball mount. One of the ball mounts can be mounted on the hub (Figure 3**Error! Reference source not found.**) while the other one can be mounted on the HEP structure.

Note: *Make sure that no cable is on the way when you are installing the hub.*

- Mount the hub into the Hub bracket using 2x M4 screw as shown in Figure 3.

a: *Hub*
b: *M4 Screw*
c: *Ball Mount*

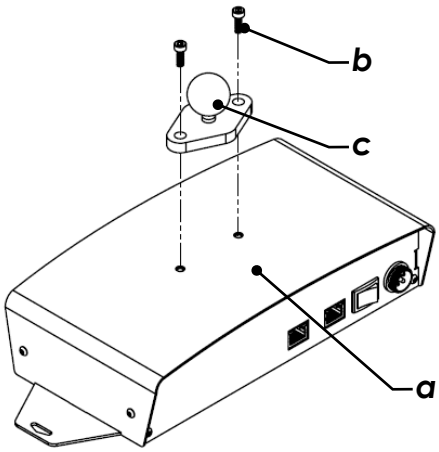

Figure 3

- Use the 8mm T-nut and the short M5 screw as shown in Figure 4 to fix the print head on the Horizontal Aluminum extrusion.

a: *Short M5 Screw*
b: *8mm T-nut*

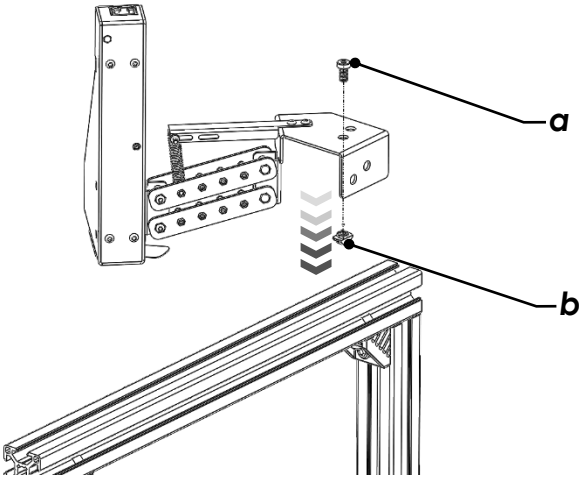

Figure 4

- Fix the second head beside the first head as described in previous step.
- Use longer M5 screws to fix the other ball mount on the third and fourth head mount plate as shown in Figure 5.

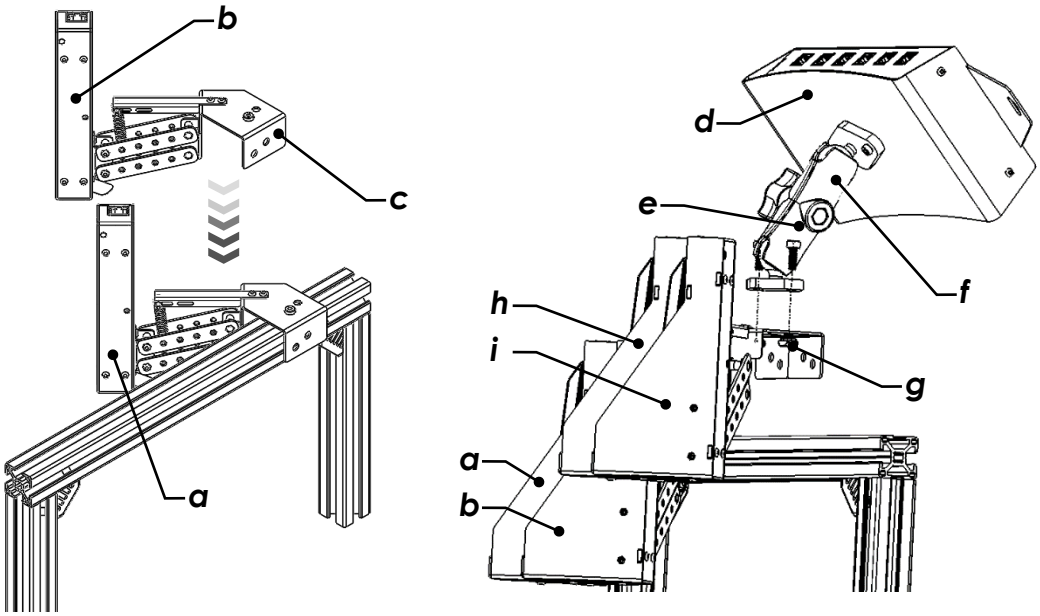

a: *First print head*
b: *Second Print head*
c: *Mount Plate*
d: *Hub*
e: *Swivel Arm*
f: *Longer M5 Screw (16mm)*
g: *T-Nut M5-8*
h: *Third print head*
i: *Fourth print head*

Figure 5

The heads and hub final assembly should be as shown in Figure 6.

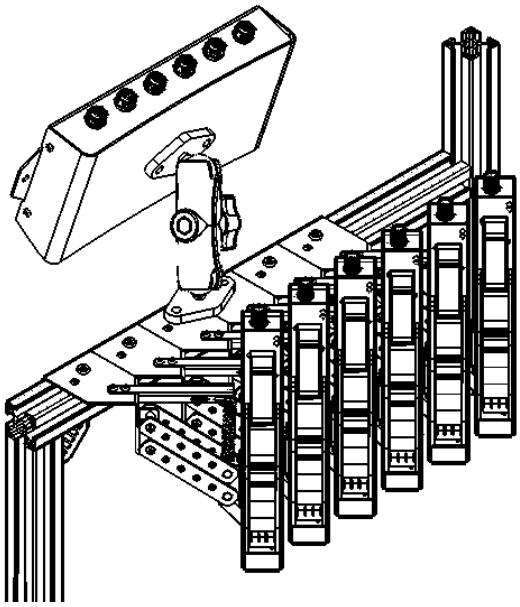

Figure 6

Mounting the Controller

- Refer to the illustration below and mount the controller to the extrusion

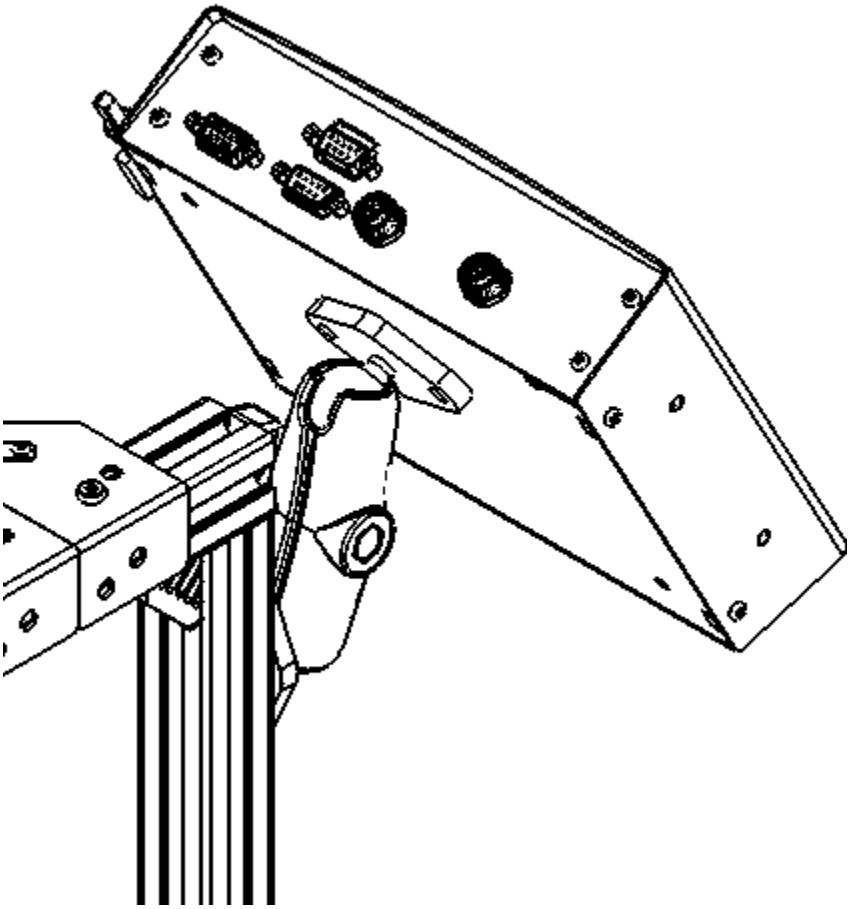

- Adjust the positioning of the controller and hub to the desired position for viewing and safe operation as shown in Figure 7.

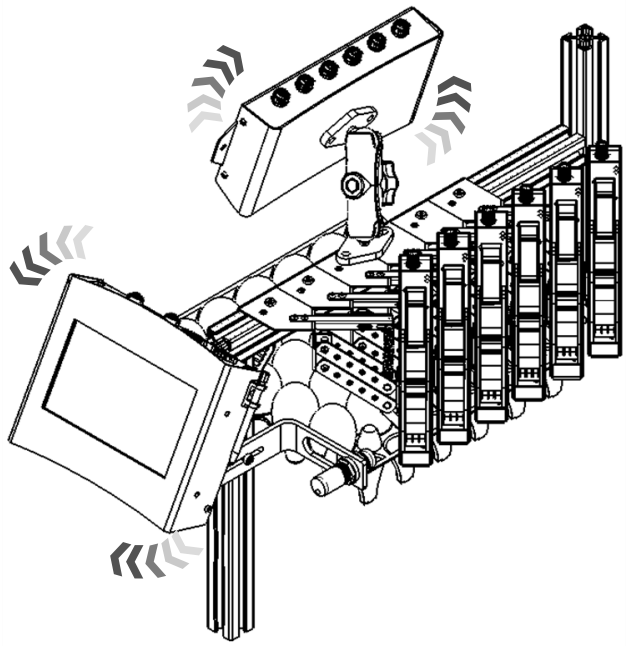

Figure 7

- Once the optimal position is determined, turn the knob on pivot mount clockwise to engage the clamp force and tighten in place.

Power Supply

- There are two different power adaptors coming with the egg printer 40/60W (Small) for printer and 160W (Large) for hub.
- Plug the Male end of the supplied 60W power adapter cable to the controller (refer to Figure 8).
- Plug the Male 4 Pin end of the supplied 160W power adapter to the hub (refer to Figure 8).
- Connect power cords with adequate length to the power adapters and plug into power source supply (single phase/120/240V AC 15 amp circuit). Avoid where possible the use of extension cords.

  Notice: *Due to different plug adaptors around the world and to avoid any misuse of connections, power cord is not provided and should be supplied locally.*

- Toggle the two-position power switch on the controller to position: ON when printer operation is required.

- Toggle the two-position power switch on the Hub to position ON after printer is boot up properly.

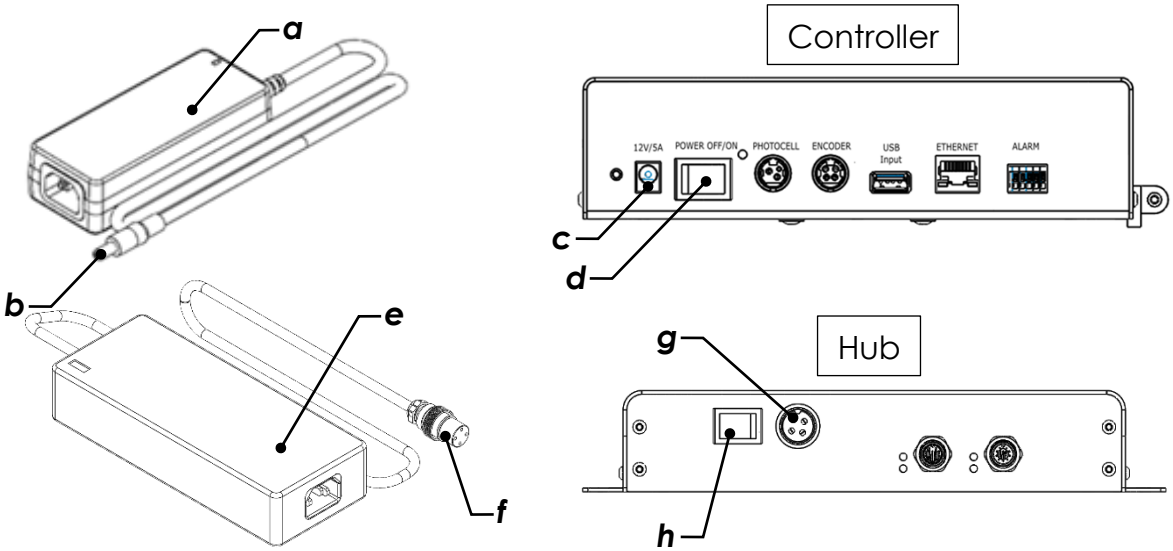

a: *Power Adapter 60W*
b: *Male thread DC connector*
c: *Power Connection (controller)*
d: *On/Off button*

e: *Power Adapter 160W*
f: *4 Pin DC Connector*
g: *Power connection (Hub)*
h: *On/Off button*

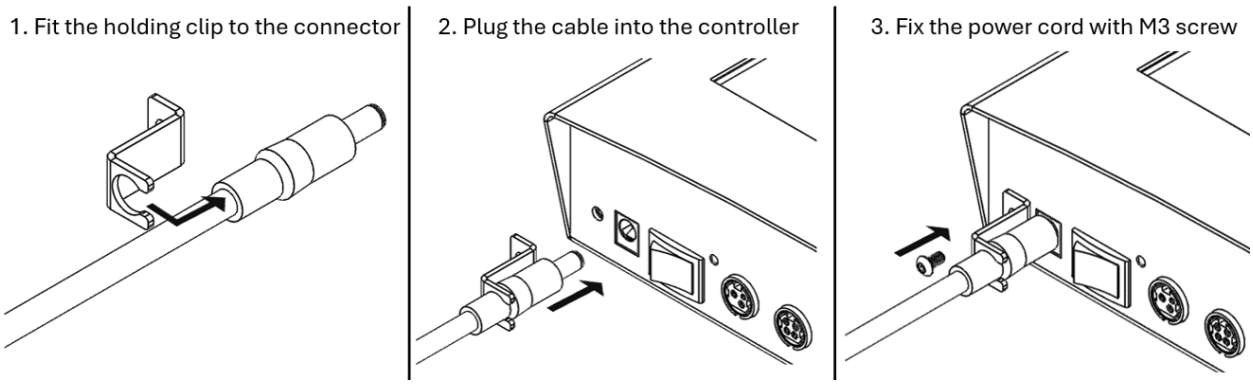

Figure 8

Data and input Connections

Notice: *DO NOT Connect/Disconnect the connectors when the power button is ON.*

Notice: *Power, data and sensor input cables must be inserted appropriately in their respective locations. Where possible, route cables away from moving objects and secure via tie-wraps.*

- Turn on the printer by toggling *ON/OFF* button and wait for the controller to start up.
- Design your message via Controller. For more information refer to User Manual

Controller to Hub

Print head 1 on Controller must be connected to INPUT 1 in hub via M12 Cable (Figure 9).

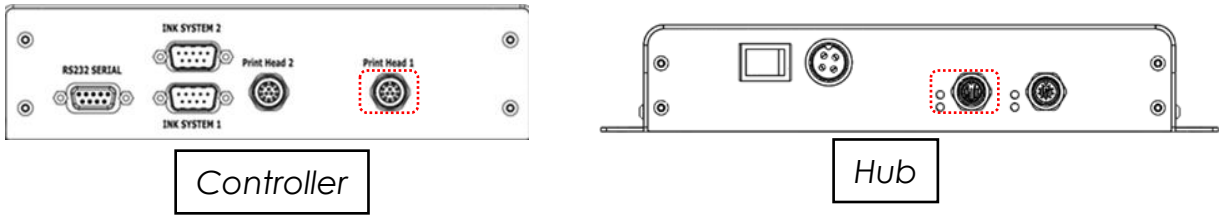

Figure 9

Hub to Print Heads

Print heads must be connected to Head 1- 6 on the hub in an order; right to left or vice versa based on how the hub is mounted (Figure 10) with M12 Cables provided with the printer.

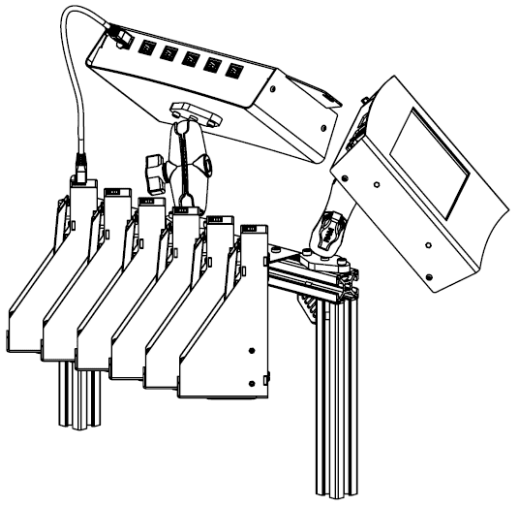

Figure 10

Photocell

For print trigger, an NPN photocell sensor is included. Photocell sensor works as Light ON trigger. Please see Figure 11.

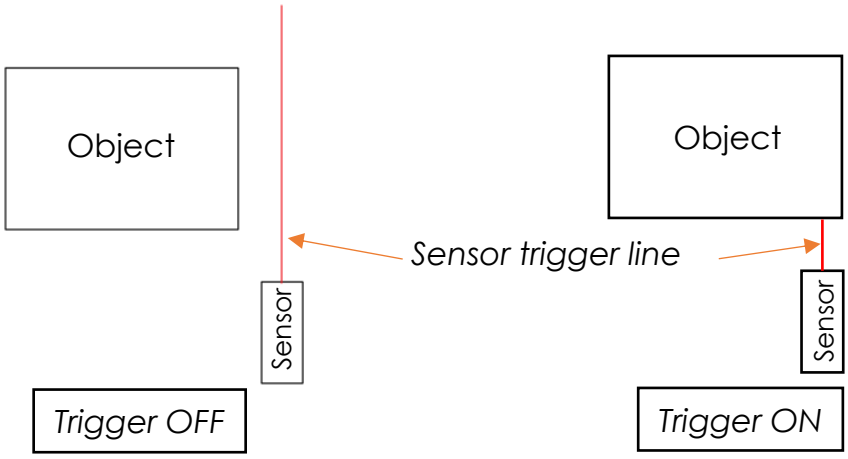

Figure 11.

An integrated sensor cable as well as a photocell mount bracket is included for versatile mounting on conveyor system.

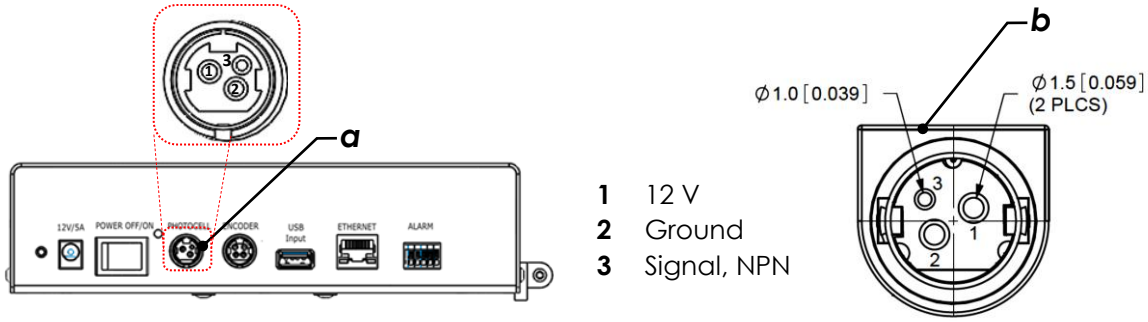

a: *Photocell Female connector (board side)*

b: *Photocell Male connector (cable side)*

Figure 12

Figure 13, shows the recommended zone for photocell sensor.

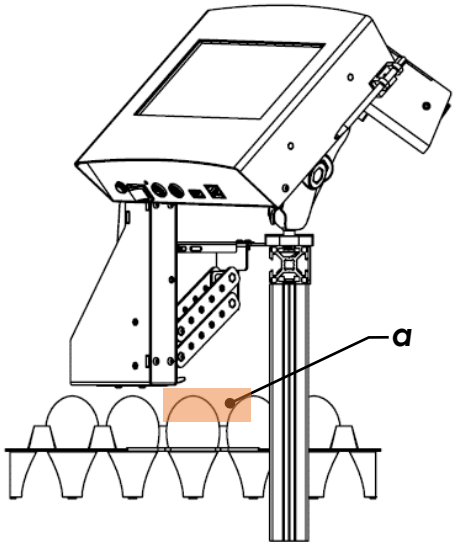

a: *Recommended sensor zone*

Figure 13

Assemble the photocell sensor to the mount and fix it to the side extrusion. Adjust the angle and placement of the photocell sensor to make sure it can detect each row of eggs without getting hit when the conveyor is moving.

a: *Photocell*
b: *Photocell mount*
c: *Photocell nut*
d: *Extrusion*

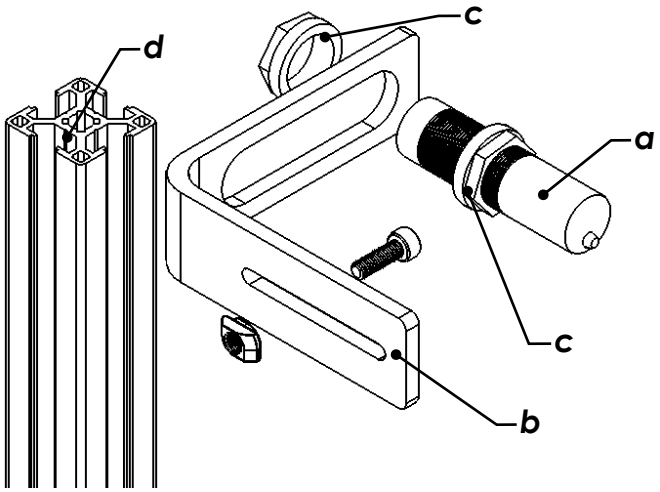

Place the photocell close to the print head

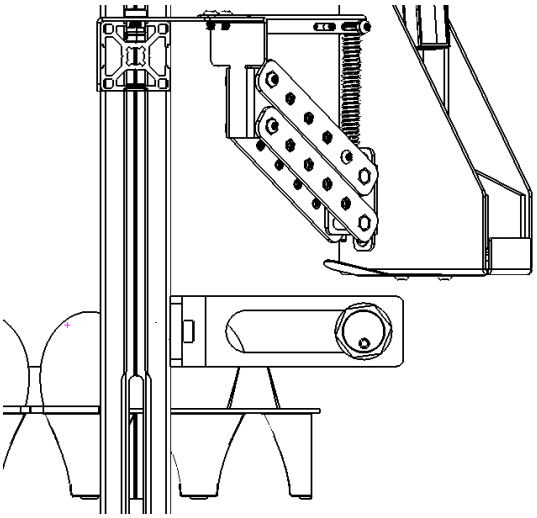

Adjust the angle if necessary

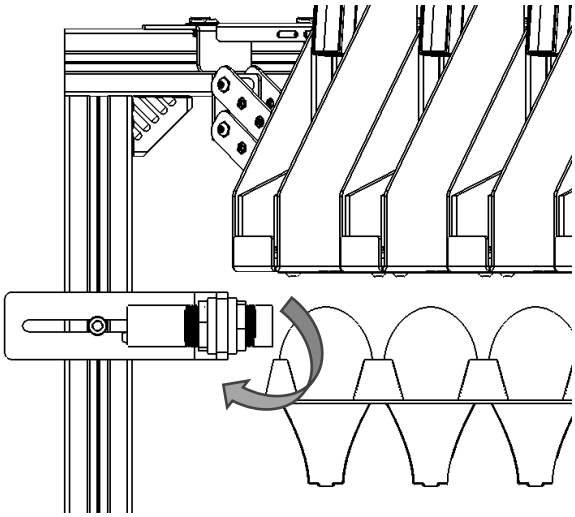

Figure 14

As shown in Figure 15, There are two settings on the photocell sensor body for adjusting sensing range (270° Potentiometer) and operating mode (2 positions).

Sensor is more sensitive to lighter colors (Highest: White) and less sensitive to darker colors (Lowest: Black). It also must be in Normally Open mode to trigger the print every time the printing substrate passes by.

a: *Minimum Sensitivity (distance)*
b: *Maximum Sensitivity (distance)*
c: *Normally Closed Mode*
d: *Normally Open Mode*

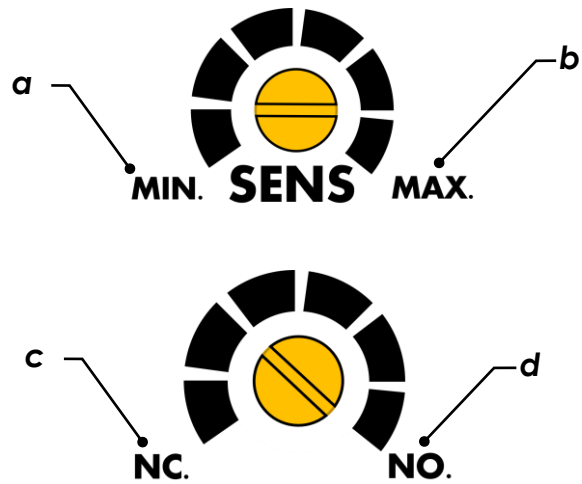

Figure 15

Notice: *Sensor is preadjusted to Max sensitivity and Normally Open mode. Please do not touch the settings unless required otherwise.*

Shaft Encoder

Printer system is shaft encoder ready and provides a 12 VDC signal input (NPN configuration) on board which triggers print command (Figure 16). This function is available on demand. Consult your distributor for more details.

The print head resolution is **R=300 DPI**. For an encoder with **N** number of pulses per revolution, Wheel Diameter **D**, is calculated by equation below:

$$\boldsymbol{D} = \frac{\boldsymbol{N}}{\pi \boldsymbol{R}}\ [in] \quad or \quad \boldsymbol{D} = \frac{25.4\boldsymbol{N}}{\pi \boldsymbol{R}}\ [mm]$$

The units used in the shaft diameter calculation formula for **n=1** revolution is as shown below:

$$\boldsymbol{D}[in] = \frac{\boldsymbol{N}\ [pulse/rev] \times n[rev]}{\pi \boldsymbol{R}[pulse/in]} \quad or \quad D[mm] = \frac{\boldsymbol{N}\ [pulse/rev] \times 1[rev]}{\pi \boldsymbol{R}[pulse/in]} \times \frac{25.4\ [mm]}{1\ [in]}$$

For example, the wheel diameter for a Shaft Encoder with **N=2500 pules per revolution** is: $D = \frac{2500 \times 1 \times 25.4}{300\pi} = 67.4mm\ (2.65")$

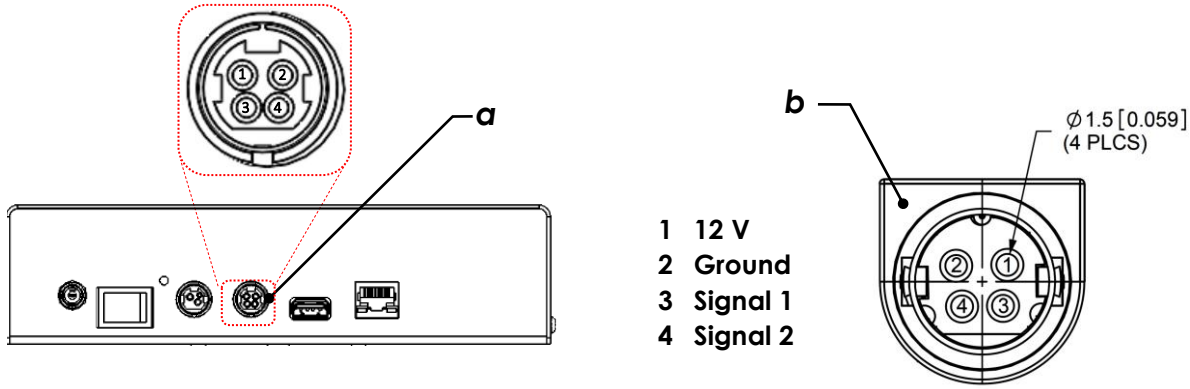

a: *Shaft Encoder Female connector (board side)*

b: *Shaft Encoder Male connector (cable side)*

Figure 16

USB

USB port is used for data uploading on typical flash drives compatible with USB2.0 connections and should not be used for any other purposes.

> ***Notice:*** *Before turning ON the machine, insert the USB in the USB connector which is located on the side of the printer*

Ethernet

Ethernet connection can connect print system to external controllers using IP based communication with PCs, PLCs, etc. Print system programming and message layout uploading/downloading is managed through this port.

> ***Notice:*** *For more information on print system configurations and Ethernet connection capabilities, please refer to "USER's MANUAL" accompanied with the device.*

a: Ethernet Port

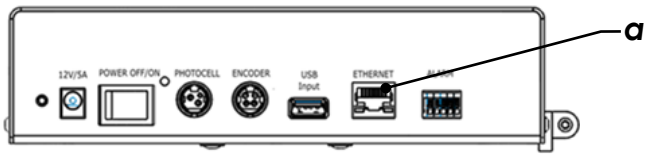

Figure 17

Start-up

Inserting cartridge

To obtain the best results always use RN MARK premium cartridges provided by HP Technology inc. that are equipped with smart chip. The chip initializes the print-head and optimizes the drop volume and ink consumption based on environmental conditions to achieve the highest print quality. The print-head is compatible only with RN Mark premium cartridges. Please avoid using any other cartridges provided by third parties.

- Open the latch on print-head as shown in Figure 18.

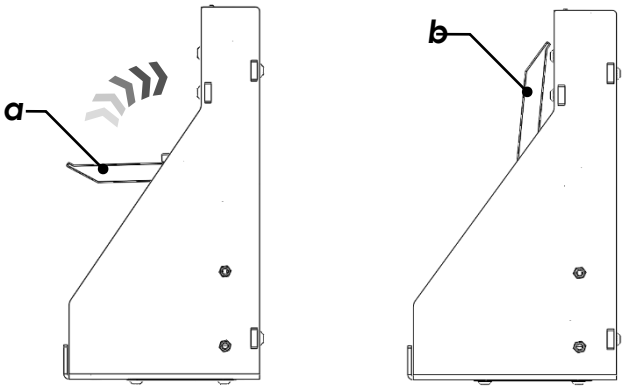

a: *Latch closed*

b: *Latch open*

Figure 18

- Carefully insert the cartridge into the print-head and make sure that it is perfectly in place as shown in Figure 19. Avoid any extra force to prevent damage on cartridge or driver pins.

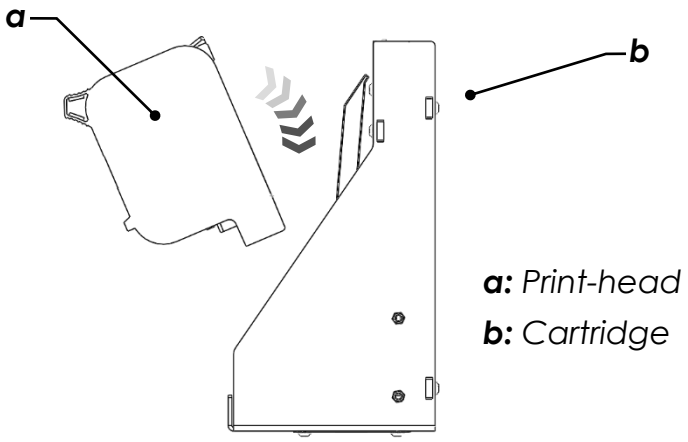

Figure 19

- Close the latch and lock the cartridge in place as shown in Figure 20.

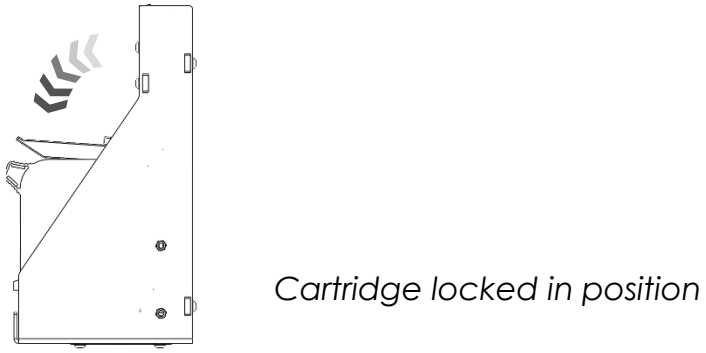

Figure 20

ATTENTION: *Never remove the cartridge when the print is ON!*

Notice: *Take out the cartridge at the end of the day and put the cover back to prevent nozzle clogging. Cartridge must not be left unattended for more than 10 hours.*

Priming / Purging

The ink system must be primed and purged before the first print. It is recommended that an absorbent material (preferably lint free) be held under nozzle plate.

- Hold the cartridge with nozzle plate facing down and press it toward the absorbent material over a flat surface. Let the gravity drain the ink out of nozzles.
- You will see two lines of ink trace, one for each nozzle column, if not gently apply pressure from sides until ink flows out.
- Gently dab the print nozzle guard with an absorbent material (preferably lint free) to remove any expelled ink.

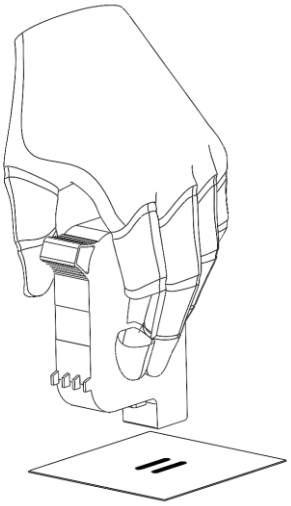

Figure 21

Maintenance and Services

The printer head may require cleaning and maintenance due to environmental or product debris such as dust, hair, fibers etc. Care must be taken during cleaning to ensure the exposed print nozzles are not damaged.

> ***Notice:*** *Always store the cartridges with nozzle plate facing down to prevent nozzle clogging.*

> ***Notice:*** *Use only RN MARK Spray cleaner for printhead maintenance.*

Installation and Technical Support

Telephone and Whatsapp technical support is available in Canada and the U.S. Monday through Friday 9:00am to 5:00pm EST.

Toll-Free: 1 866 551 9406

Sales: 1 905 597 4977

Sales: 1 905 597 4978

Tech Sup: 1 905 597 9406

Tech Sup: 1 905 597 9406 (Whatsapp Available)

Questions and comments can also be sent to: ts@rnmark.com

WWW.RNMARK.COM